在组装之前请仔细阅读说明书并应对内容充分的理解！

Before beginning assembly, please read these instructions thoroughly.

Flight Model™
HIGH PERFORMANCE AIRCRAFT

GP version

EP version

这个遥控模型不是玩具！
This radio control model is no toy!

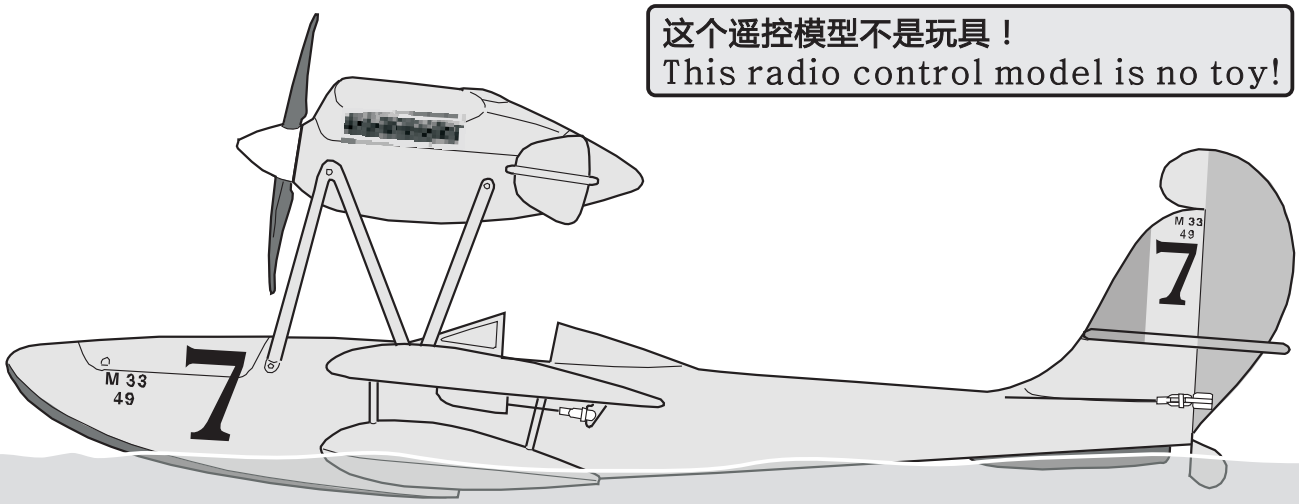

WINGSPAN: 1460mm (57.5")

MACCHI M33 50

组装说明书
INSTRUCTION MANUAL

有关安全的注意事项 UNDER SAFETY PRECAUTIONS

为了能够正确地组装此模型，以使此模型的设计性能得到充分的发挥，应该在有经验人士的正确指导下组装。
For correct assembly and best performance of the design, you should seek the assistance of an experienced RC pilot with assembly.

请在儿童触及不到的地方组装这架飞机。
Assemble this model aircraft only in places out of children's reach.

在模型飞行之前，要采取充分的安全措施。您要对飞行现场的设施及人身安全负责。
Take enough safety precautions prior to operating this model. You are responsible for the safety of all the facilities and spectators at the airfield.

飞行前要检查周围是否有无线电干扰。
Before start-up you need to ensure that there are neither microwaves nor wireless-LAN systems or devices in operation for they might cause interferences.

请您遵守国家的有关无线电管理条例。
You should abide by related State Radio Regulations.

在组装完成后，请继续保留此说明书以便查阅。
Always keep this instruction manual ready at hand for quick reference,even after completing the assembly.

首次飞行该模型者应该从有经验的飞行者处收集有关飞行和调整的信息。
First-time flyers should seek the advice on pre-flight adjustments and assembly from experienced modelers

记住，飞行一架没有组装好或是没有调整好的飞机模型是非常危险的！
Always keep in mind that an improperly assembled or adjusted model is very dangerous!

初学者要在有经验人士的指导下飞行，切不可单独飞行！
Novice flyer should always be assisted by an experienced flyer and should never fly alone!

这架飞机模型的动力是46-75级的模型专用引擎，安装功率过大的引擎或是过激的飞行会导致严重的损伤或事故！
This model aircraft is designed to be powered by .46-.75 size engine. Installing a larger powered engine,or flying this model aggressively may lead to serious damage and accidents!

其他所需用品（不包括在套件内）ITEMS REQUIRED FOR OPERATION(Not included in kit.)

注意 注意:关于下面列出设备的细节(级别,制造者等等),请咨询你的模型商店.
CAUTION: For details concerning the equipment listed below(size,maker,etc.), check with your hobby shop.

GPversion **EP**version

遥控设备
Radio Set

一台最少4通道的飞机用无线电设备(5个标准舵机),并且可以使用镍氢或者镍铬电池.
A minimun 4 channel radio for airplanes(with 5 standard servos), and nicad or alkaline batteries are required.

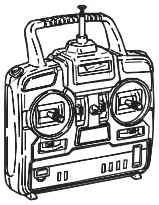

注意 注意:仅可以使用最小4通道的飞机专用遥控设备!
(不可用其他遥控设备!).
CAUTION: Only use a minimum 4 channel radio for aircraft!
(No other radio may be used!)

■ 8节干电池(发射机用)
8 AA-size Batteries(for TX)

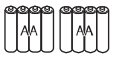

■ 海绵片
Sponge Sheet

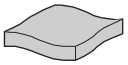

■ 舵机延长线------3根
Servo extension cords(100mm)-----3pcs

动力系统
Power system

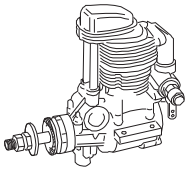

■ 两冲程 46-50
2-stroke .46-.50

■ 四冲程 52-56
4-stroke .52-.56

■ 热火头
Glow Plug

■ 消音器
Muffler

■ 油管
Fuel line

■ 尼龙扎带 2条
Nylon Strap 2psc

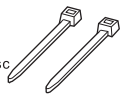

■ 接收机电池
Batter for RX : 4.8V 500mAh

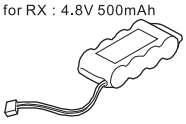

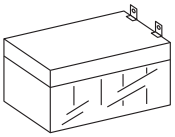

■ 启动器电瓶
12V Battery
(for starter)

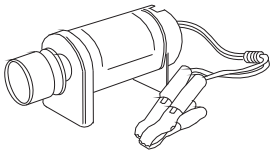

■ 启动器
Engine Starter

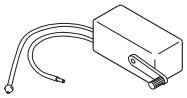

■ 燃料泵
Fuel Pump

■ 模型专用燃料
Glow engine fuel only

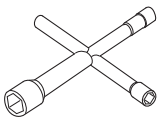

■ 模型专用的套筒扳手
Plug Wrench

■ 点火器
Ignition

■ 点火器充电器
Ignition Charger

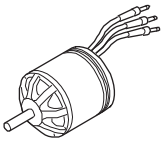

■ 相当于46-63级别的外转子电动机
Suitable Outer Rotor Motor

■ 使用输出总功率在600-800瓦的
Use components so total output is between 600-800W.

■ 电动机:参考KV值600-650RPM
Motor:KV600-650RPM

■ 70安培的电子调速器
ESC: More than 70A

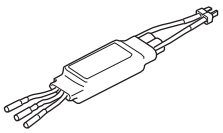

■ 动力电池:18.5V 4000mAh
Batter : 18.5V 4000mAh

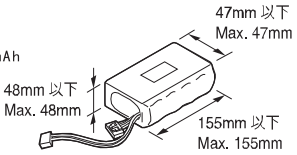

■ 电调延长线
ESC extension cords

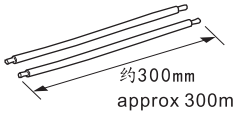

■ 插头
Connector

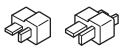

■ 充电器
Charger

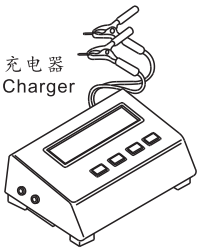

螺旋桨和桨罩
Propeller and
Spinner

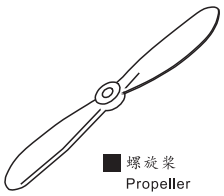

■ 螺旋桨
Propeller

■ 桨帽(63mm)
Spinner(63mm)

粘合剂
Glue

■ 瞬间粘合剂(502胶)
Instant Glue(CA Glue)

■ 环氧树脂胶（AB胶）
Epoxy Glue

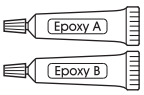

必要的工具 TOOLS REQUIRED

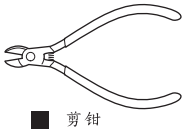

■ 剪钳
Cutting Plier

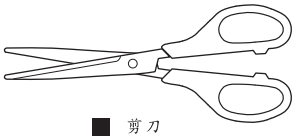

■ 剪刀
Scissors

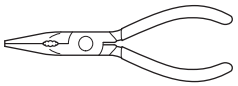

■ 钳子
Plier

■ 烫斗
Iron

■ 钻头
Drill

■ 裁纸刀
Sharp Hobby Knife

■ 大,中,小号螺丝刀
Screwdrivers(L,M,S)

■ 六角扳手(3mm)
Hex Wrench(3mm)

组装前请注意 BERORE YOU BEGIN

● 组装前请仔细阅读说明书，它会给您全面详细的指导。如果您是第一次接触飞机模型的人士，应在有经验人士的正确指导下组装。
Read through the manual before you begin. It will give you overall instructions in details. If you are first-time flyer, please assemble this model with assistance of an experienced modeler.

● 确认全部零件，如果损坏或缺少，请及时和经销商联系。
Check all parts. If you find any defective or missing parts, contact your local distributors in time.

● 由于气候、温度和湿度的变化，模型的蒙皮可能会出现松弛的现象，您可以用包有一层棉布的电烫斗重新将蒙皮烫平，但要注意温度不可太高。
The pre-covered film on ARF models may wrinkle due to variations of temperature. You can use an iron covered with a cloth to smooth the film. Set the iron to a low setting, too much heat may cause damage.

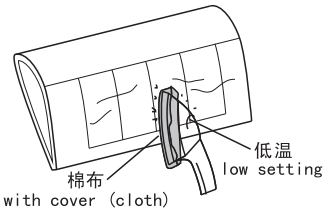

说明书指示符号的含义 SYMBOLS USED THROUGHOUT THE INSTRUCTION MANUAL, COMPRISE :

使用环氧树脂胶粘接
Apply epoxy glue

确保组装,并且完成后可活动
Ensure smooth mon-binding movement while assembling

需要另外购买
Must be purchased separately

使用瞬间粘合剂
Apply instant glue

左,右组装方法相同
Assemble left and right sides the same way

切去阴影部分
Cut off shaded portion

需要注意这里
Pay close attention here

按照指示钻孔
Make hole with awl

剪去多余部分
Cut off excess

相同方法组装多个
Assemble as many times as specified

注意方向
Note the direction

按照指定顺序装配
Assemble in the specified order

重要注意事项，
不要忽略此符号
Do not overlook this symbol

1 飞机支架 Airplane Stand

GP/EP version

这是一个工作台,也是一个展示架.
Can be used as a work stand or display stand.

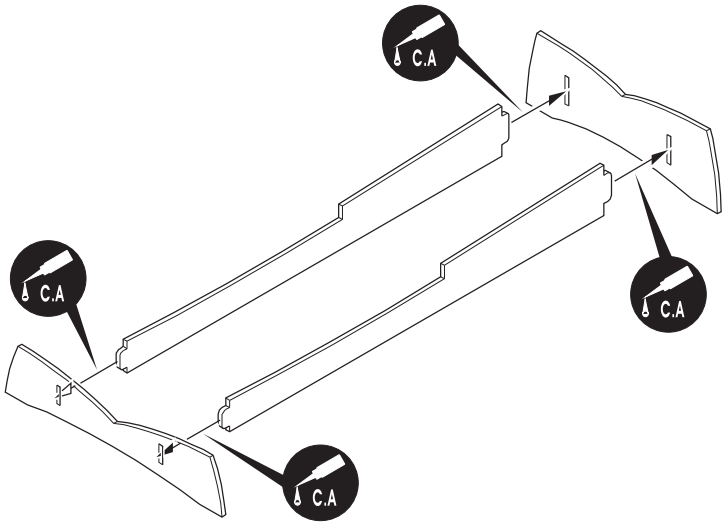

2 机翼 Wing

GP/EP version

警告 Warning!

确保将合页粘牢。
如果它们在飞行中松动可能导致事故。
Make certain the hinges are adequately secured with glue.
If they come loose in flight accidents may result.

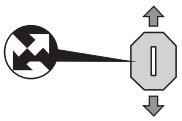

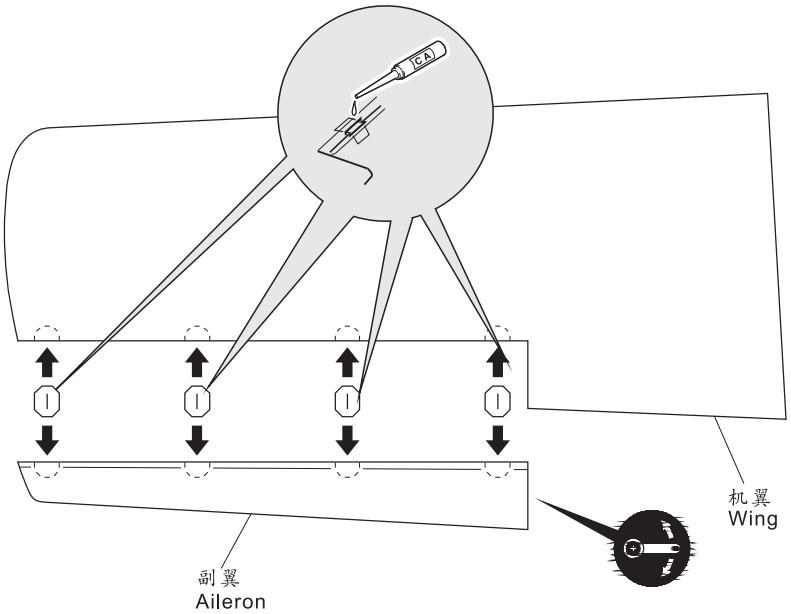

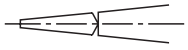

请将机翼和副翼的中心线对正。
Align the center line of wing with aileron.

L R

3 机翼 Wing

GP/EP version

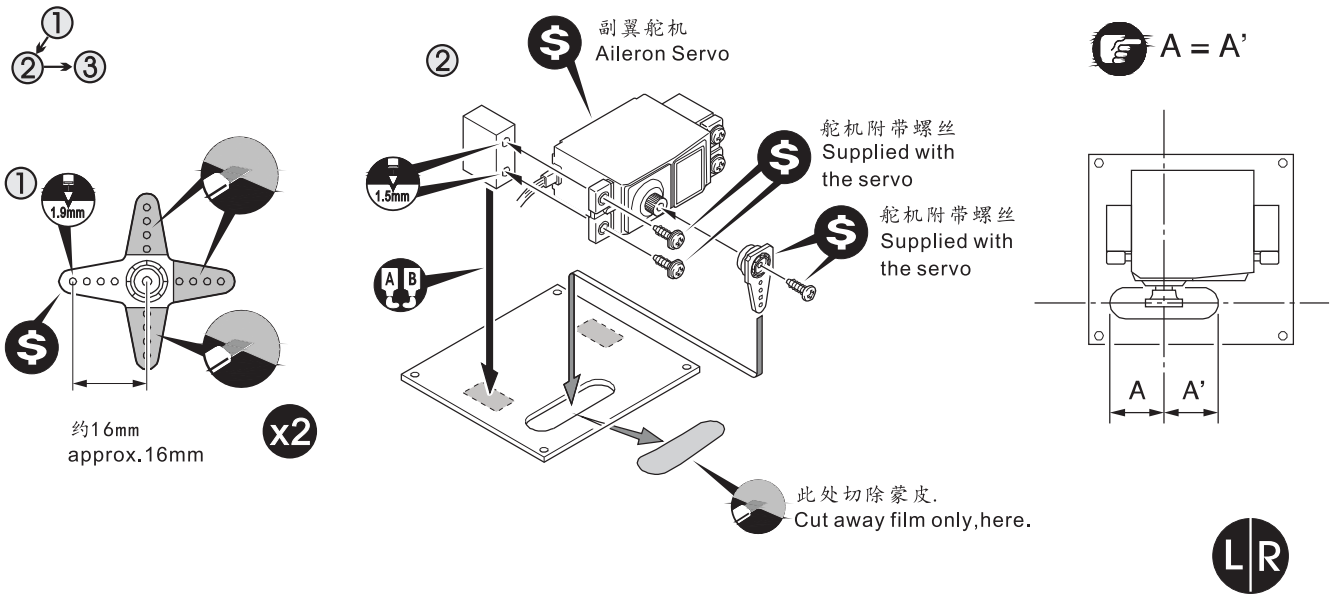

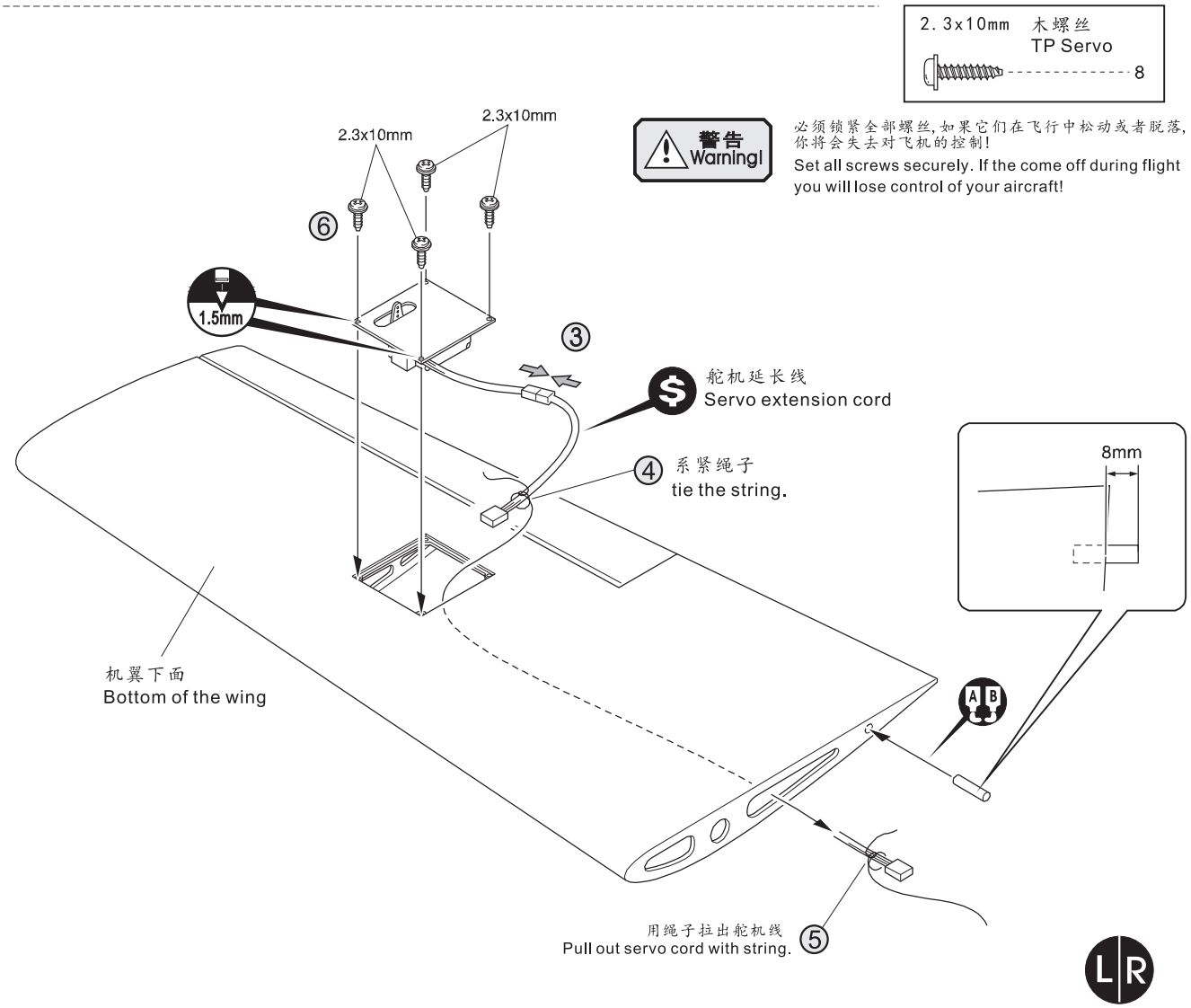

4 机翼 Wing

GP/EP version

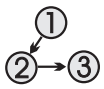

① 副翼连杆
Aileron Rod

⑦

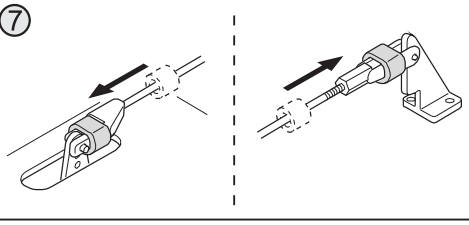

④

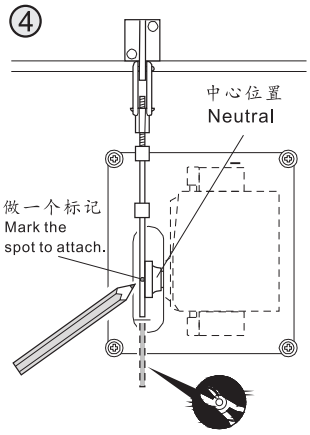

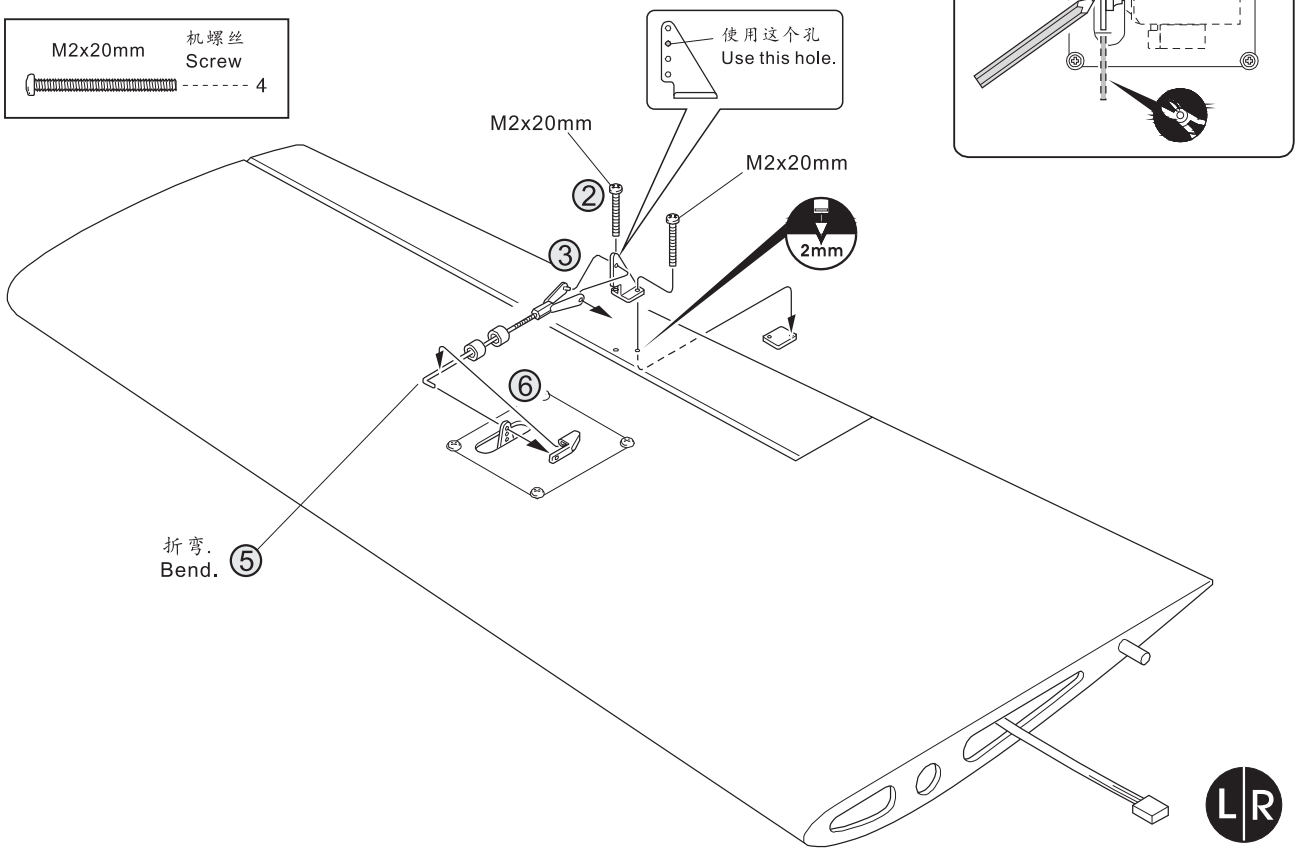

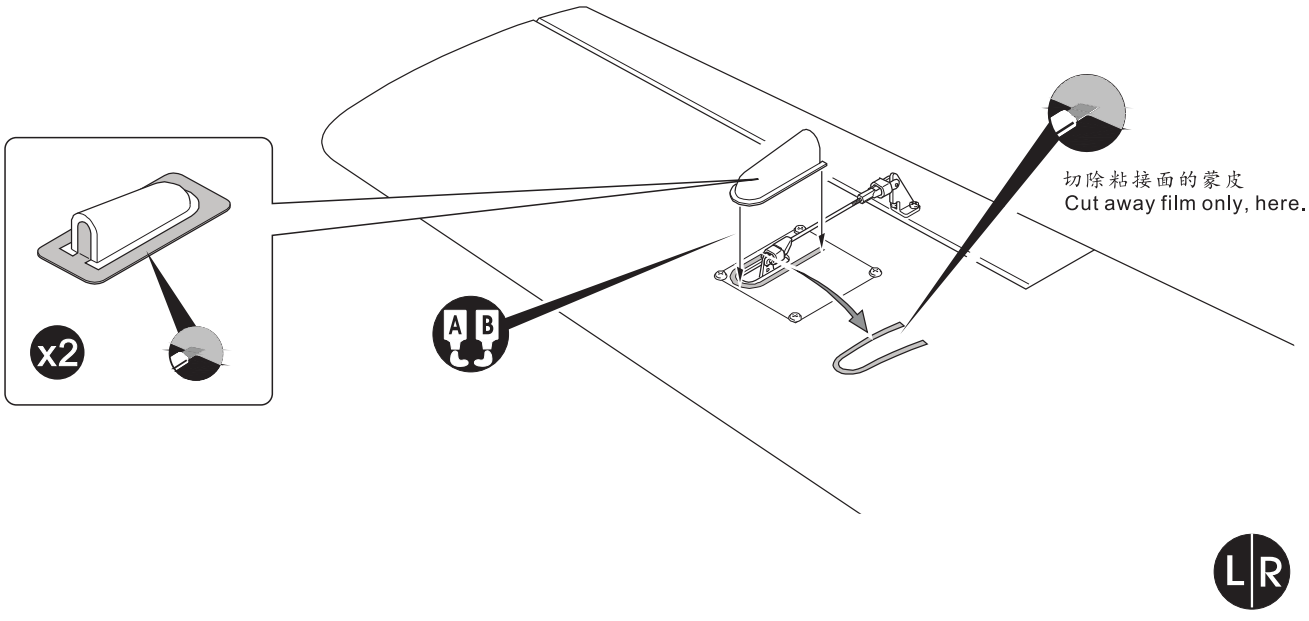

5 机翼 Wing

GP/EP version

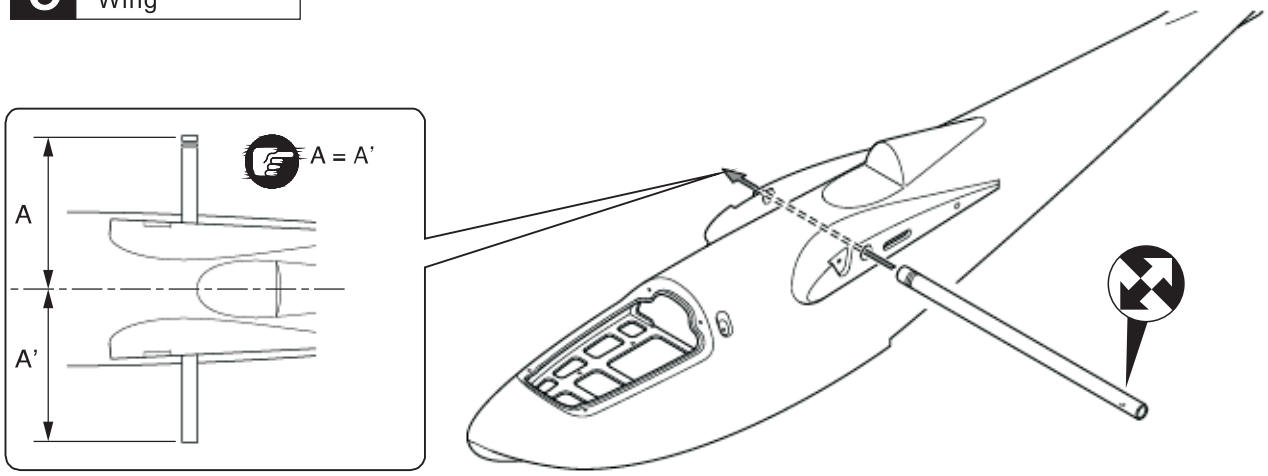

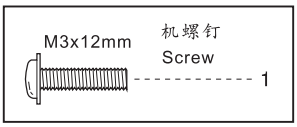

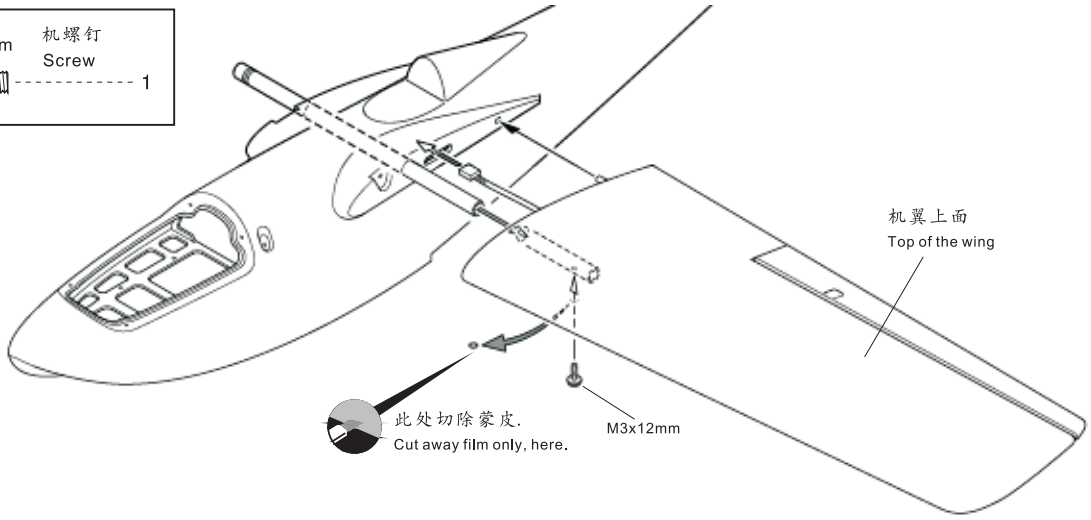

警告 Warning!

必须锁紧全部螺丝,如果它们在飞行中松动或者脱落,你将会失去对飞机的控制!

Set all screws securely. If the come off during flight you will lose control of your aircraft!

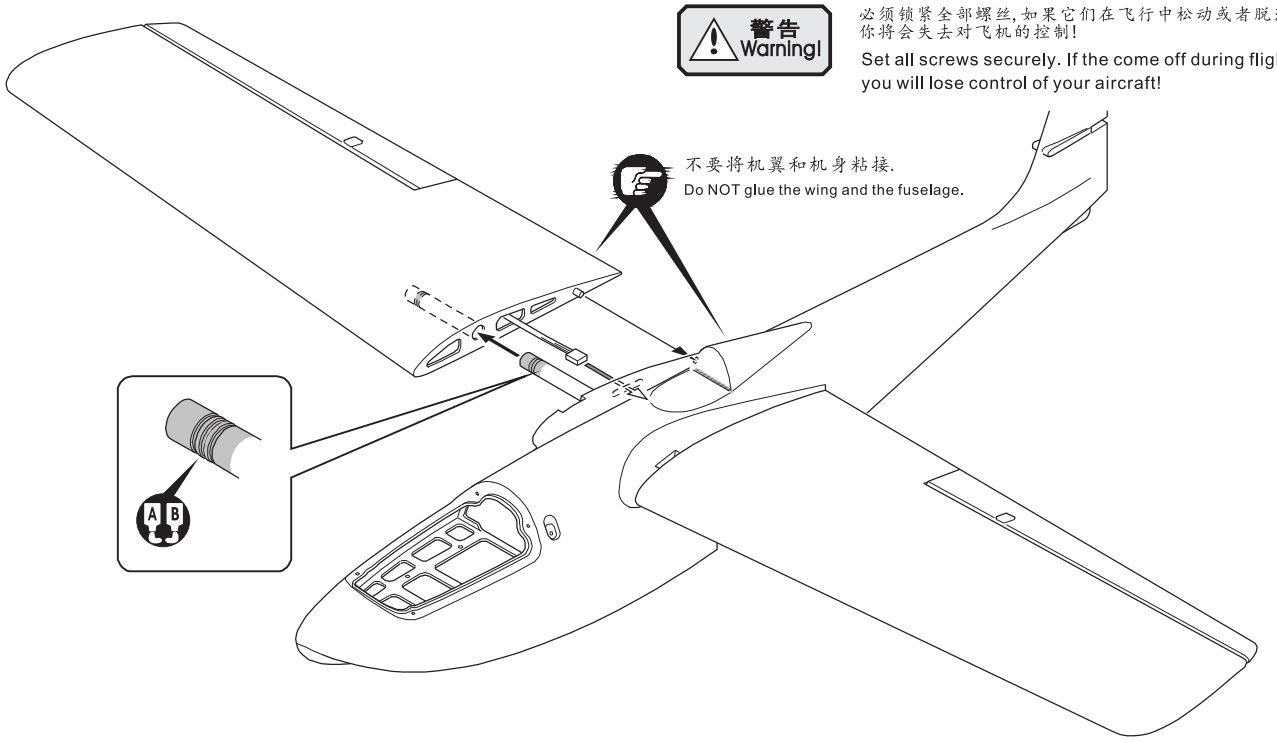

6 水平尾翼 Horizontal Tail

GP/EP version

警告 Warning!

确保对齐舵面,如果错误的粘接可能导致飞行事故.
Make certain plane is aligned accurately per the diagram.
A mis-aligned plane can fly erratically and cause accidents.

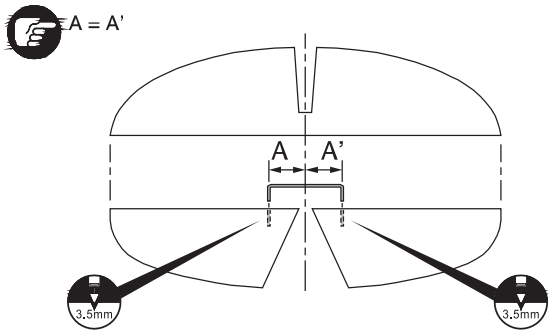

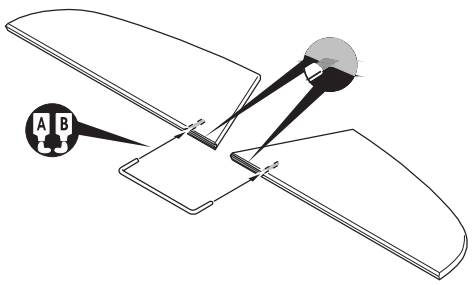

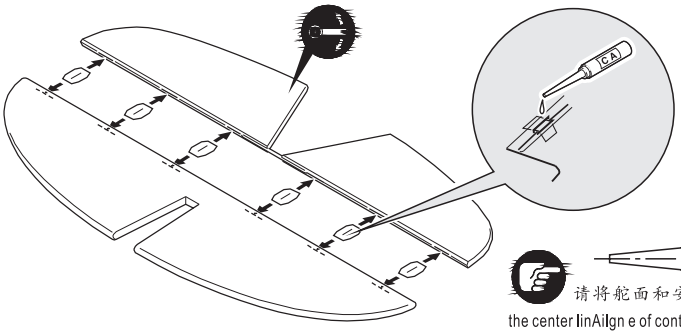

请将舵面和安定面的中心线对正。
the center linAilgn e of control surfaces with stabilizers

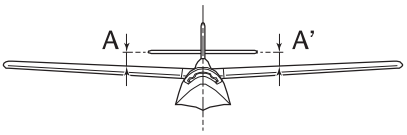

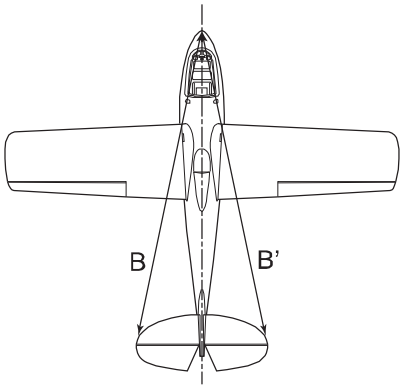

A = A'
B = B'

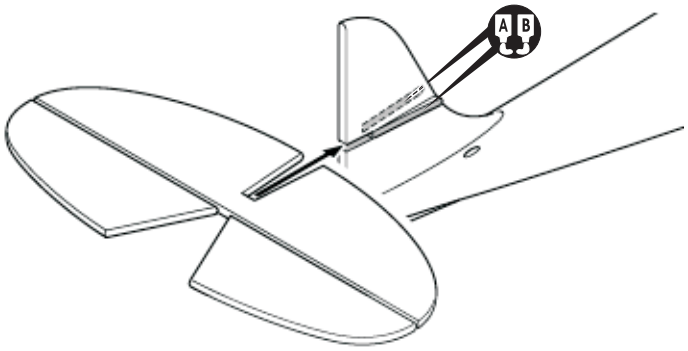

7 垂直尾翼 Vertical Tail

GP/EP version

警告 Warning!

确保对齐舵面,如果错误的粘接可能导致飞行事故.
Make certain plane is aligned accurately per the diagram.
A mis-aligned plane can fly erratically and cause accidents.

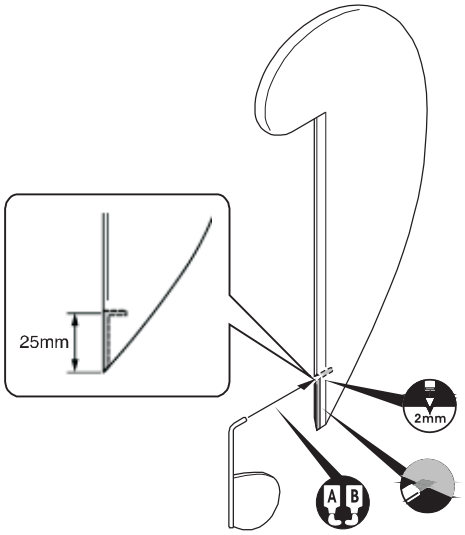

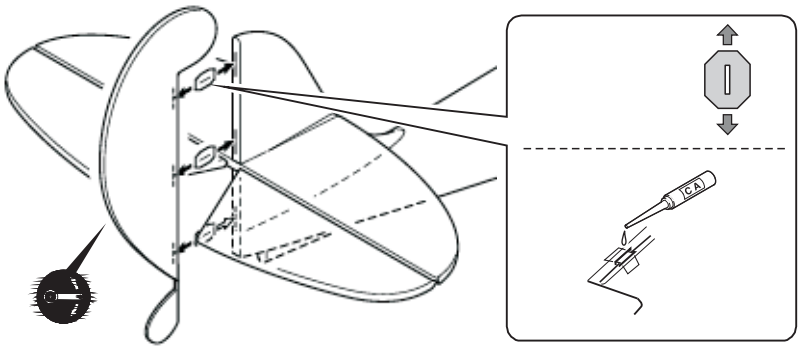

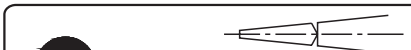

请将舵面和安定面的中心线对正。
Ailgn the center line of control surfaces with stabilizers

8 水平尾翼 Horizontal Tail

GP/EP version

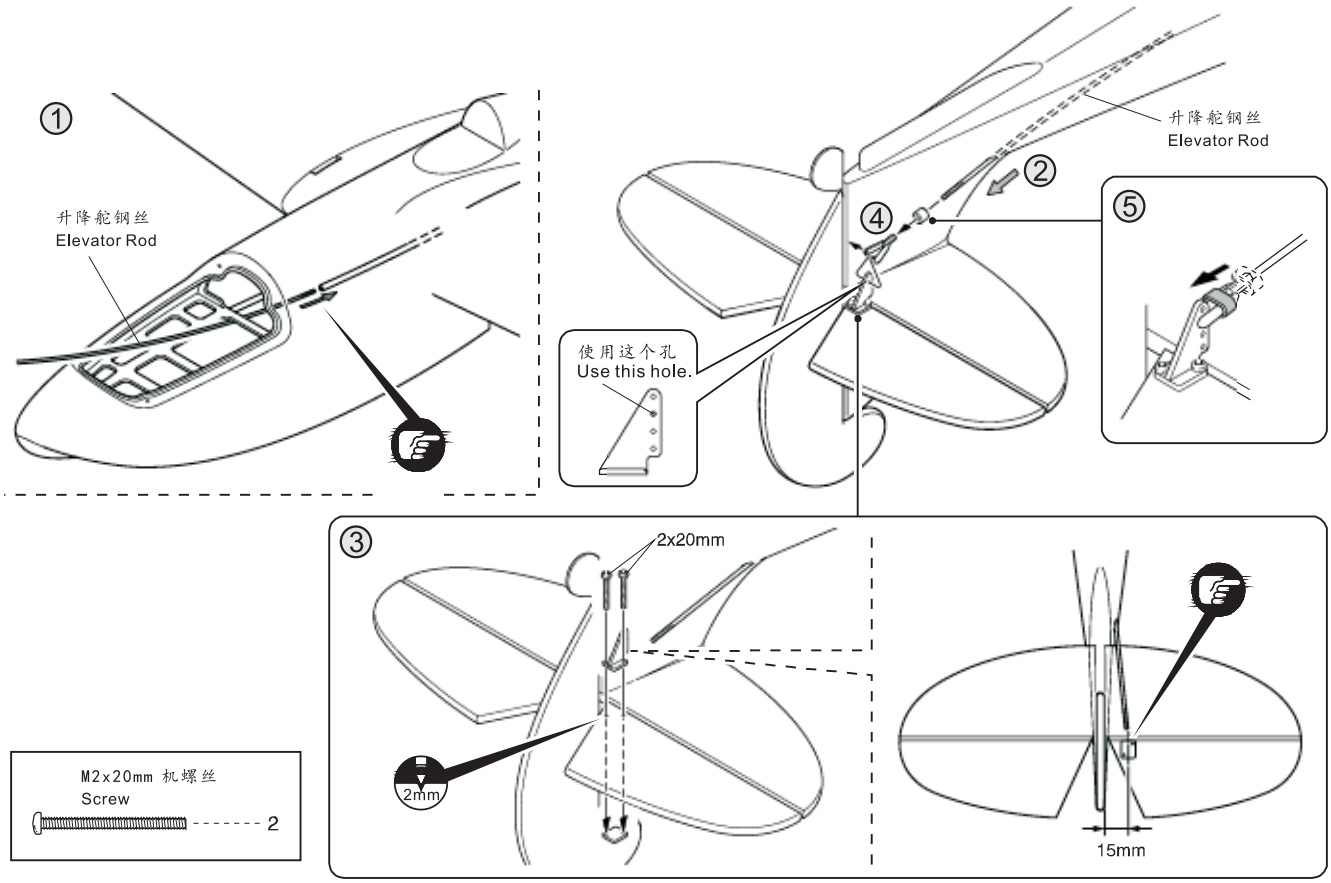

M2x20mm 机螺丝
Screw
2

9 垂直尾翼 Vertical Tail

GP/EP version

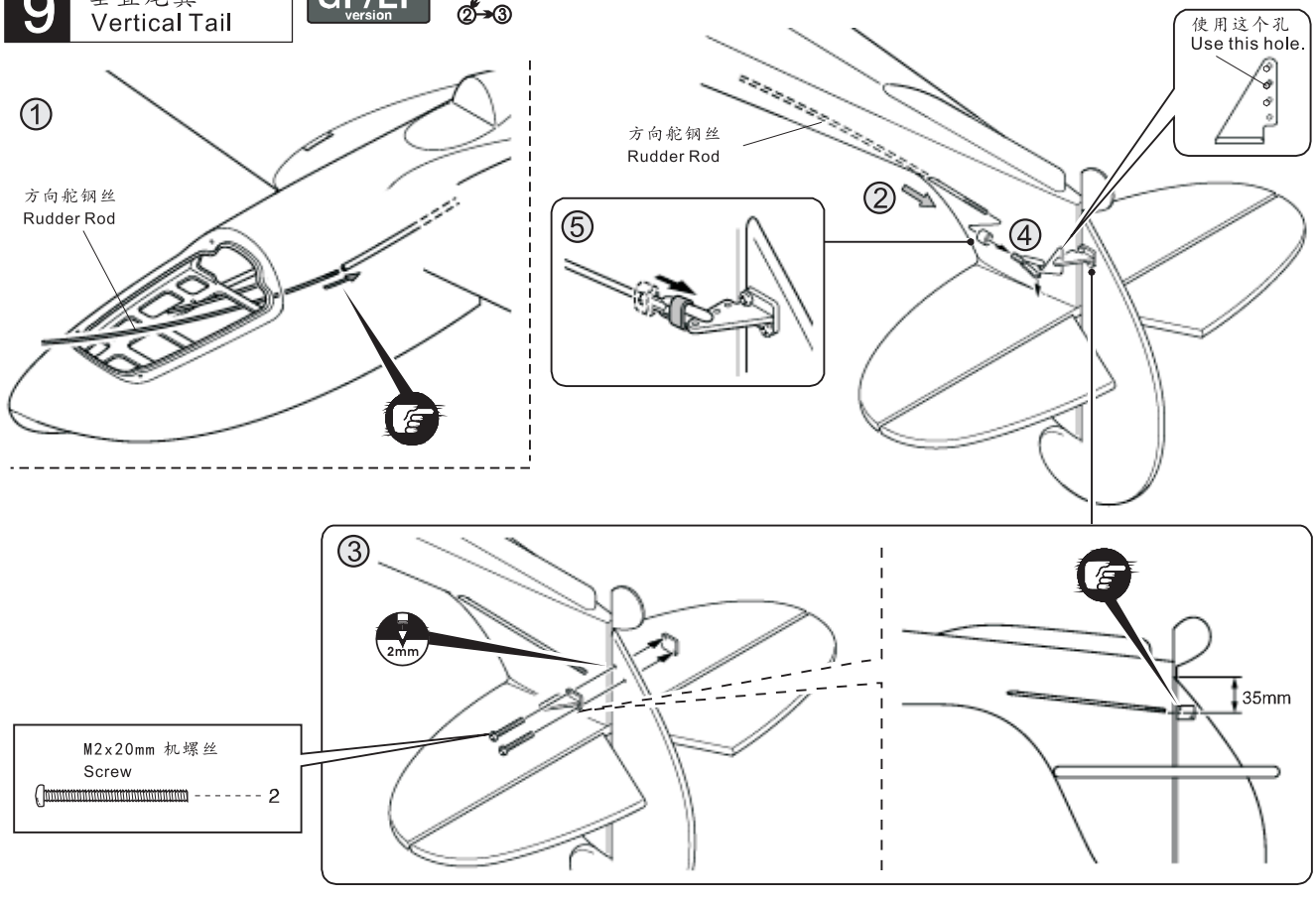

M2x20mm 机螺丝
Screw
2

10 升降舵机，方向舵机 Elevator Servo, Rudder Servo

GP/EP version

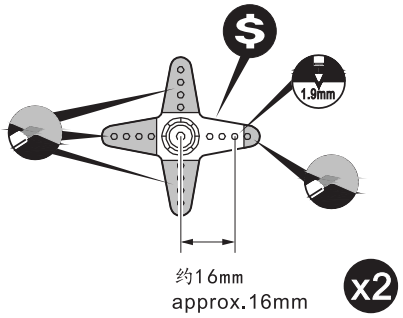

升降舵舵机
Elevator Servo

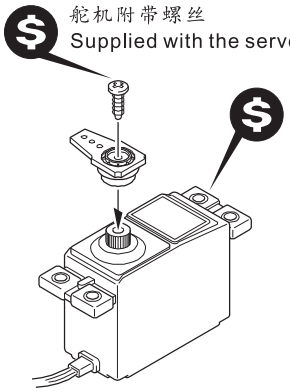

方向舵舵机
Rudder Servo

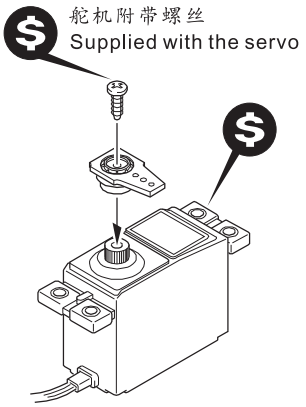

请参考下面图片安装每个舵机.
Refer to the pictures below and install each servo.

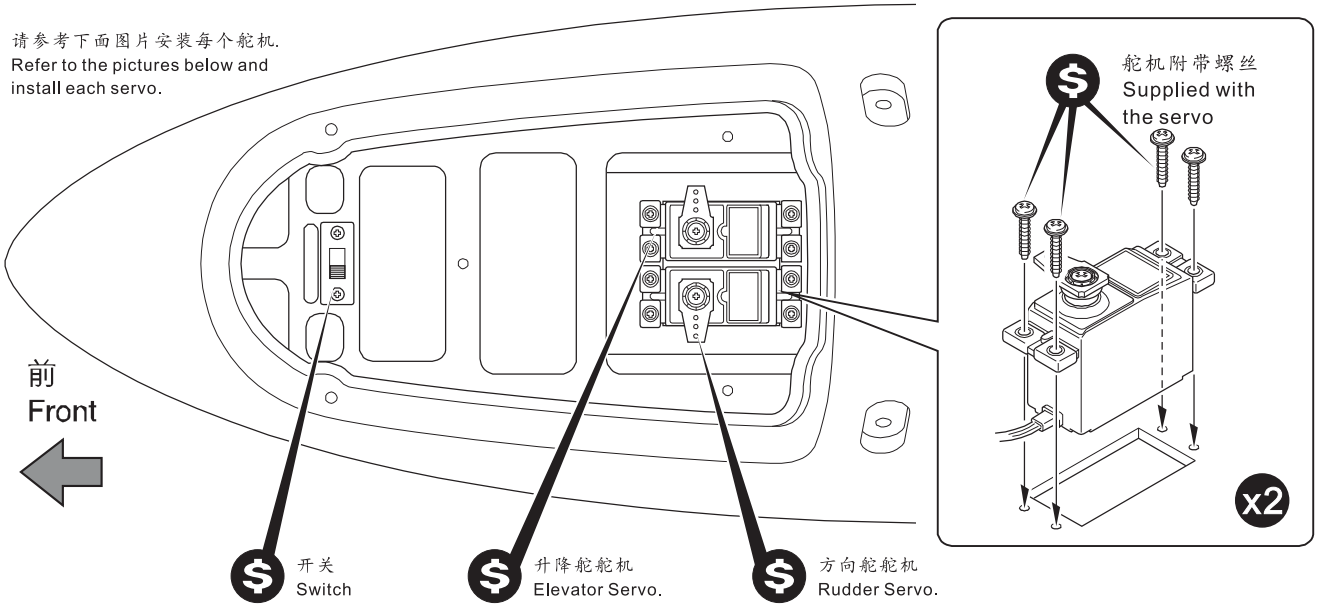

11 升降舵连杆，方向舵连杆 Elevator Rod, Rudder Rod

GP/EP version

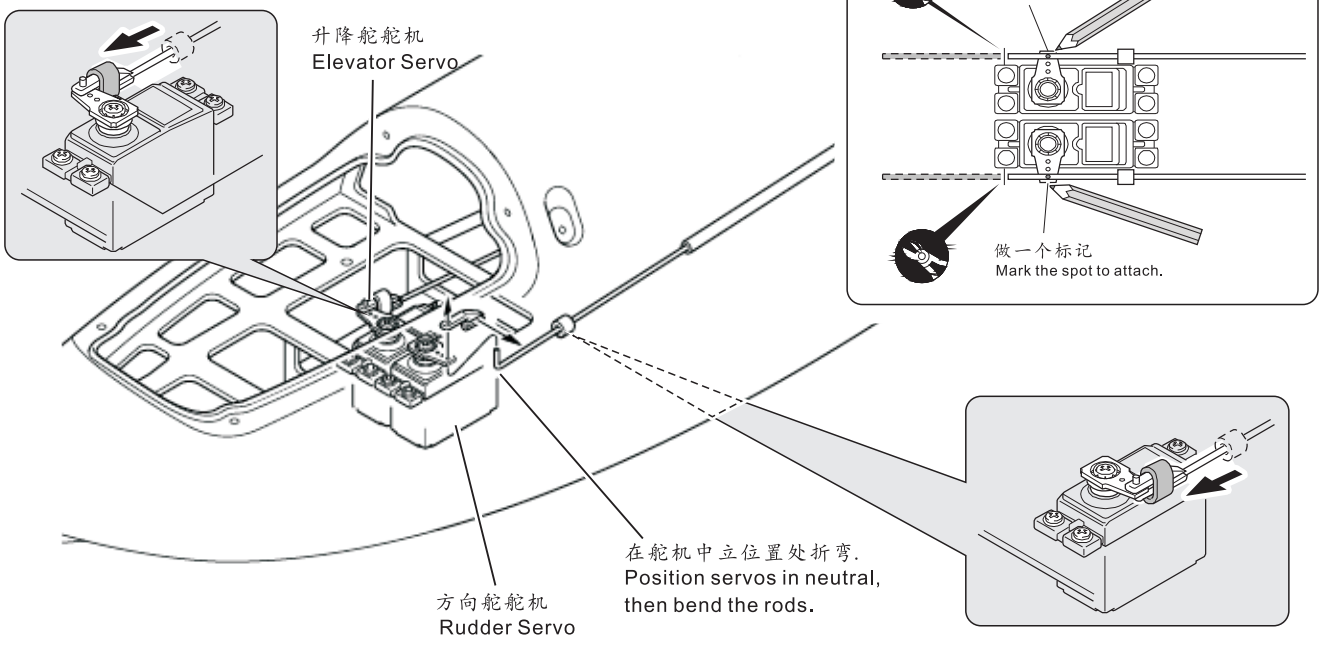

12 座舱风挡 Canopy

GP/EP version

2x8mm 自攻钉
TP Screw ---------- 4

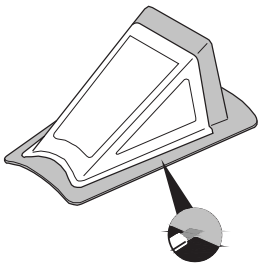

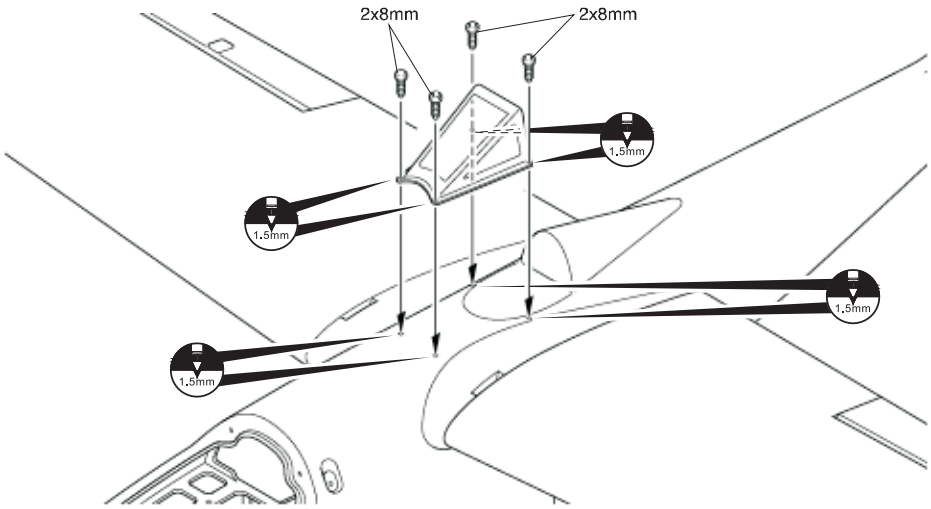

13 支架 Stay

GP/EP version

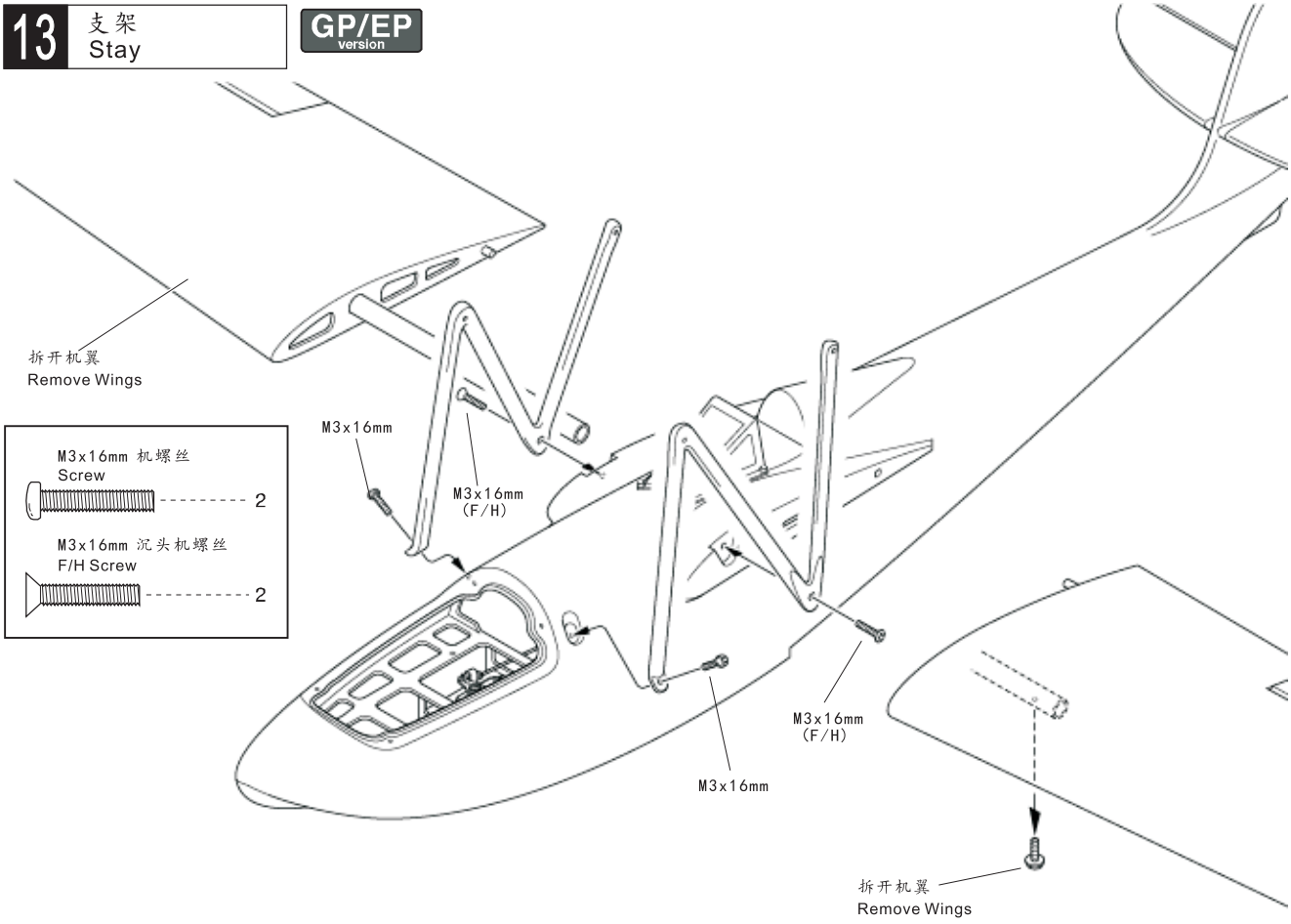

M3x16mm 机螺丝
Screw ---------- 2

M3x16mm 沉头机螺丝
F/H Screw ---------- 2

GP version 发动机版本.
For engine model version. ⇨ P12 14 引擎舱 Nacelle

EP version 电动机版本.
For electric model version. ⇨ P17 24 引擎舱 Nacelle

GP version

14 引擎舱 Nacelle

GP version

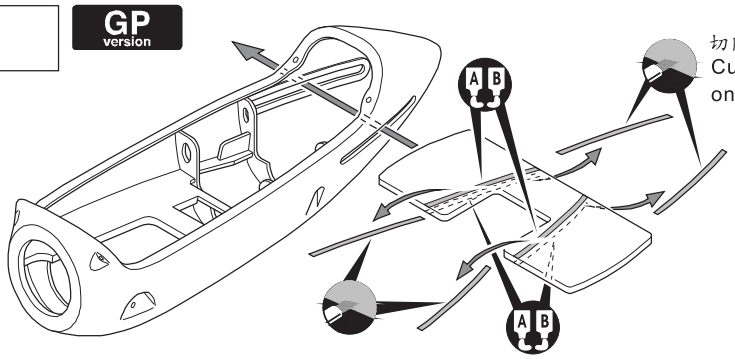

切除隐形部分.
Cut away film only, here.

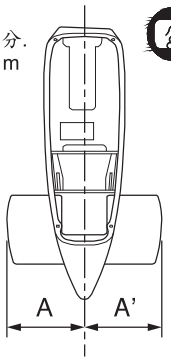

A = A'

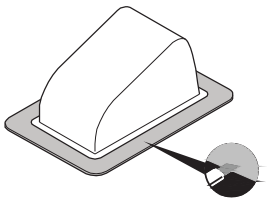

切除阴影部分.
Cut away film only, here.

x4

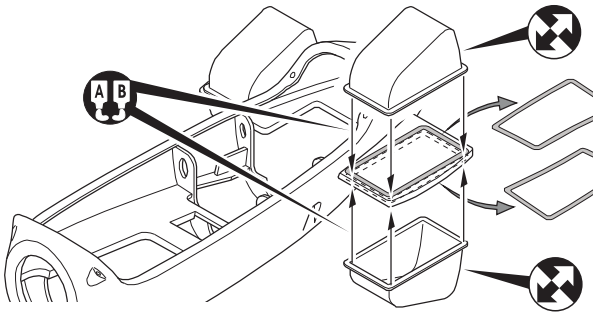

切除隐形部分.
Cut away film only, here.

L R

15 发动机 Engine

GP version

M3x20mm 杯头机螺丝 Cap Screw	3mm 平垫片 Washer	M3 爪螺母 Blind Nut
4	4	4

① 侧视图 Side View

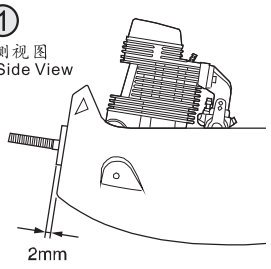

请注意这个距离
Refer to this dimension.

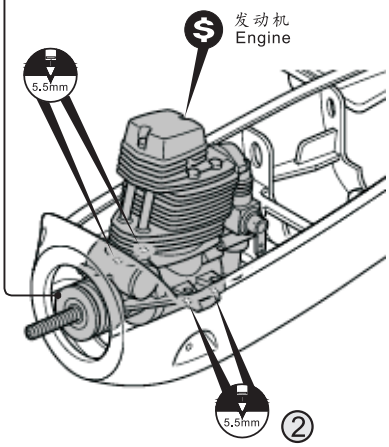

③

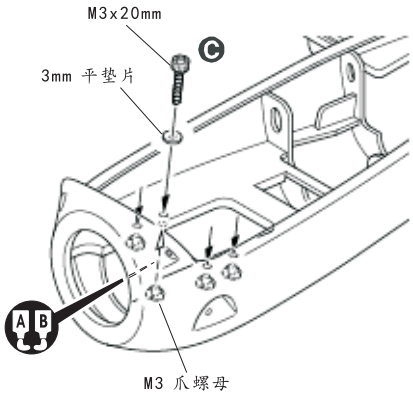

④

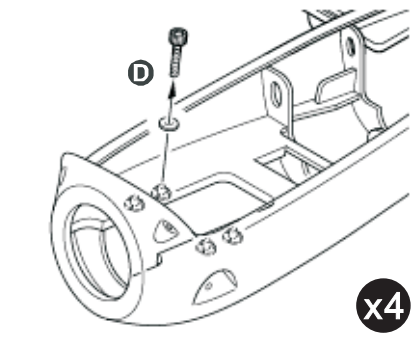

x4

⑤

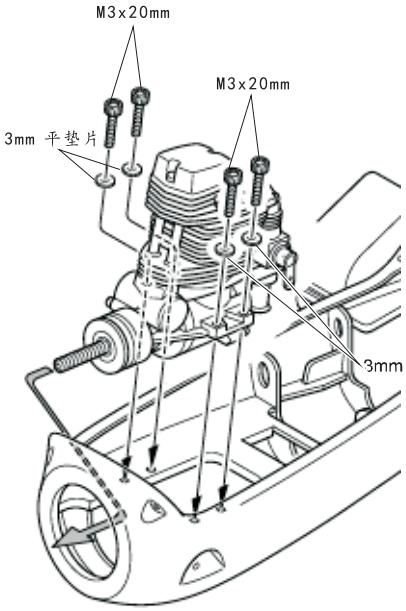

16 油门舵机 Throttle Servo

GP version

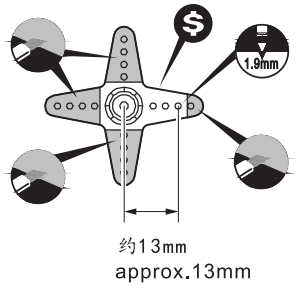

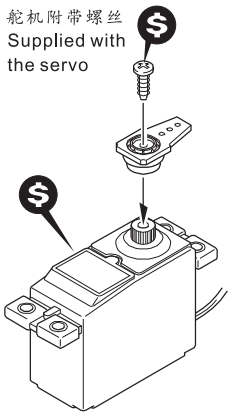

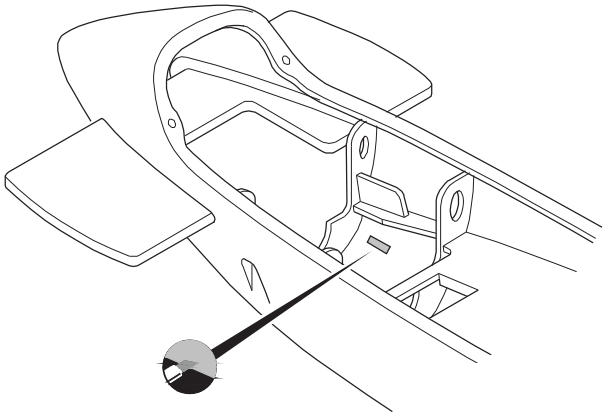

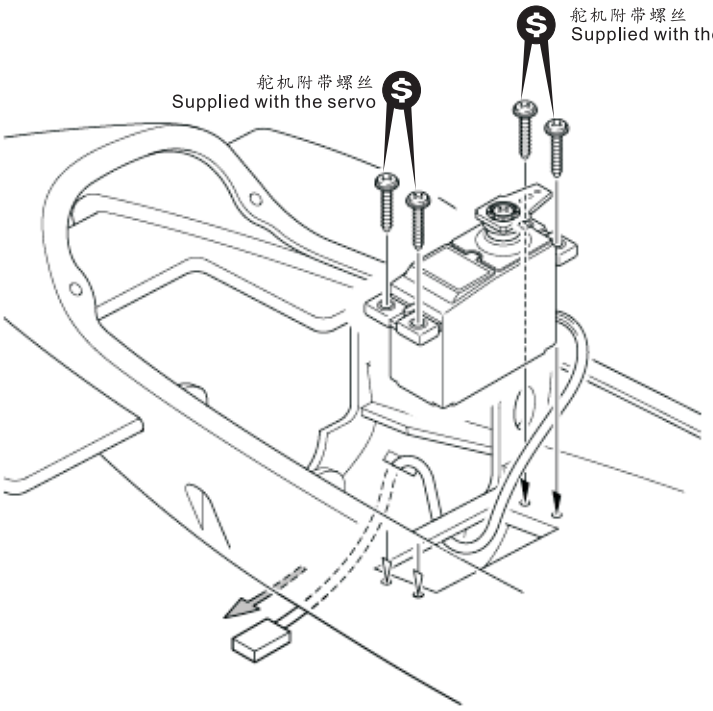

请参考下面图片安装每个舵机.
Refer to the pictures below and install each servo.

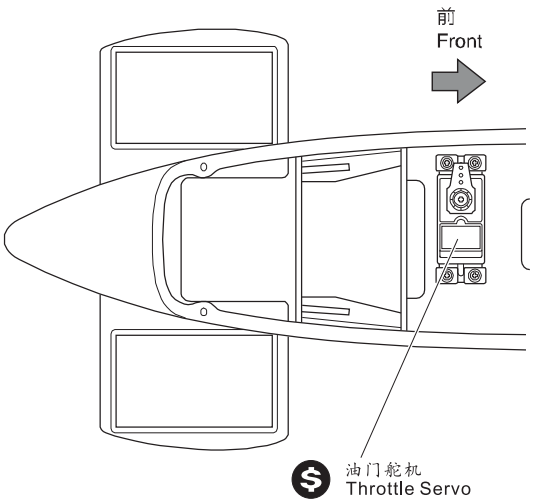

17 油门钢丝 Throttle Linkage

GP version

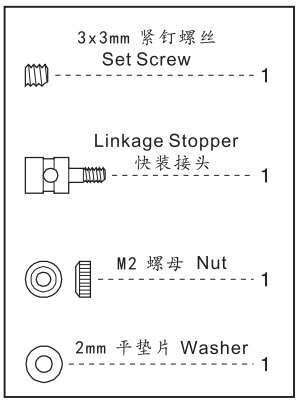

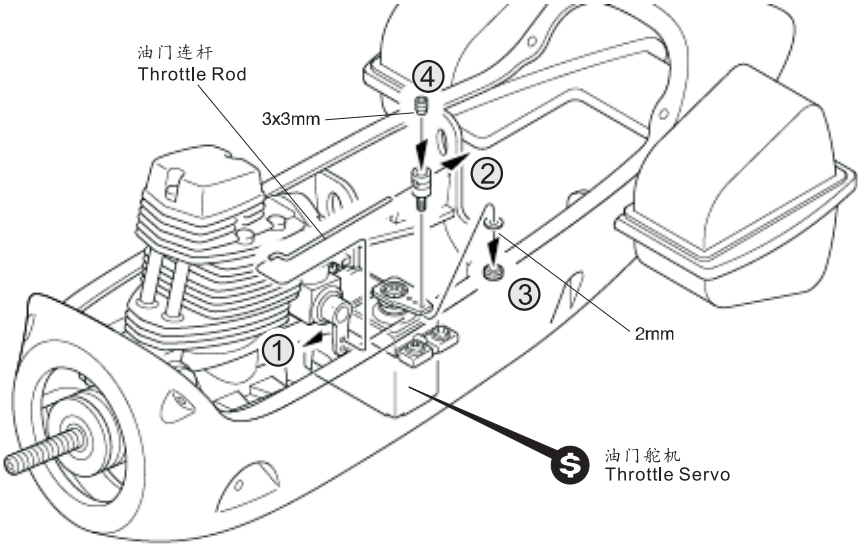

18 油箱 Fuel Tank

GP version

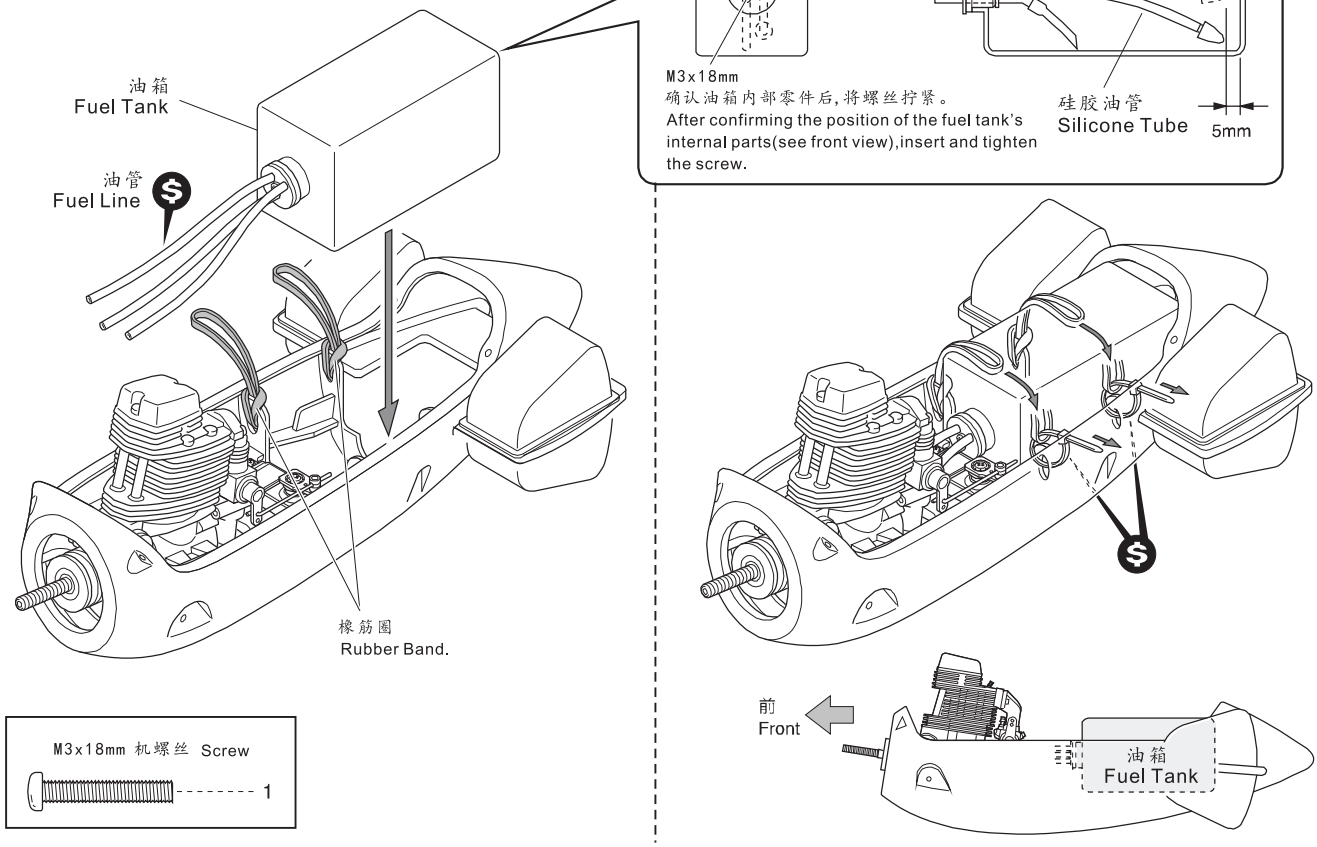

M3x18mm 机螺丝 Screw — 1

19 发动机舱 Nacelle

GP version

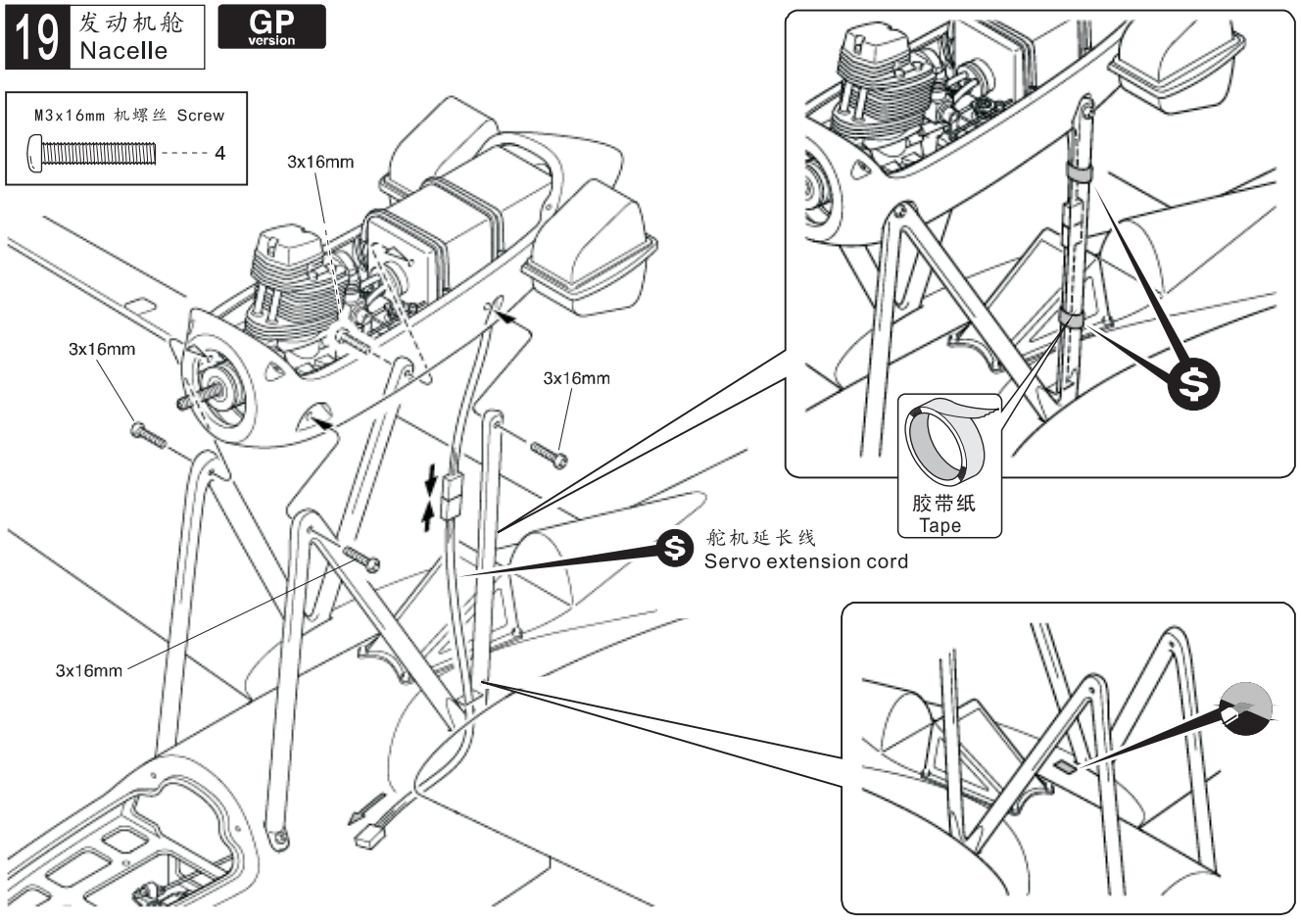

20 接收机, 电池 Receiver, Battery

GP version

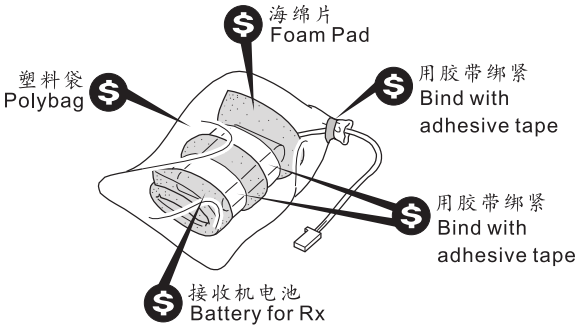

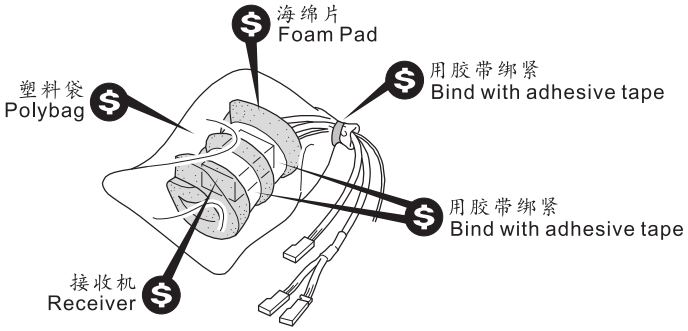

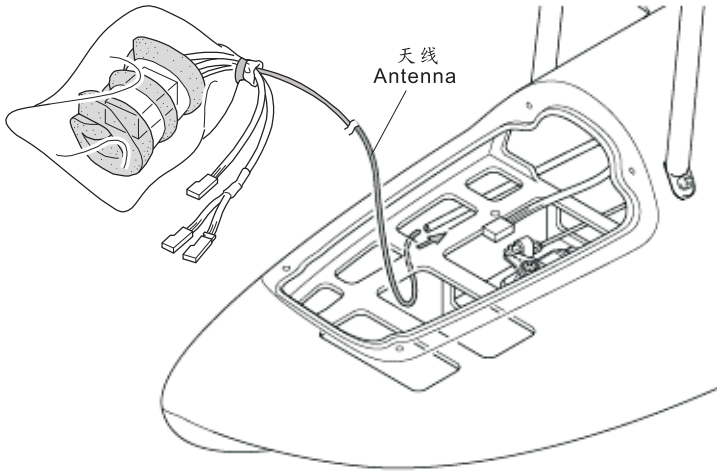

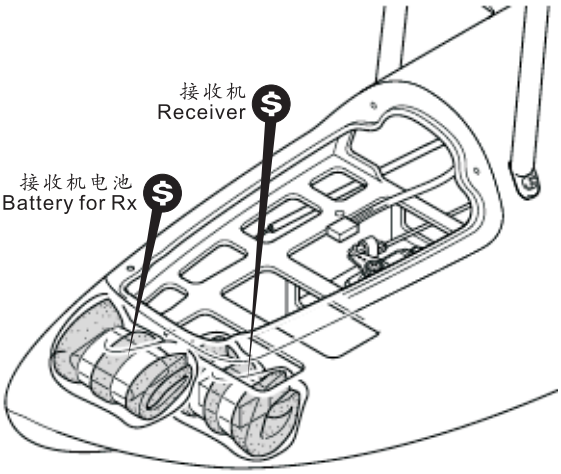

21 发动机舱盖 Nacelle Cover

GP version

M3x12mm 机螺丝 Screw — 2

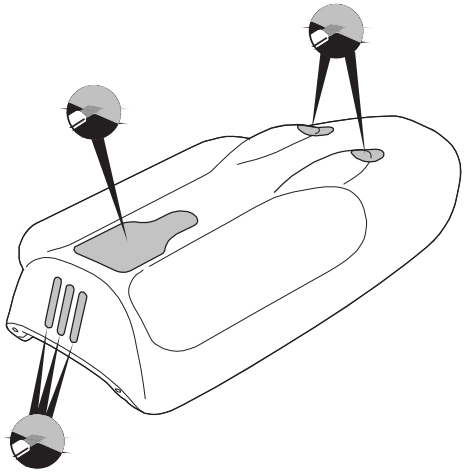

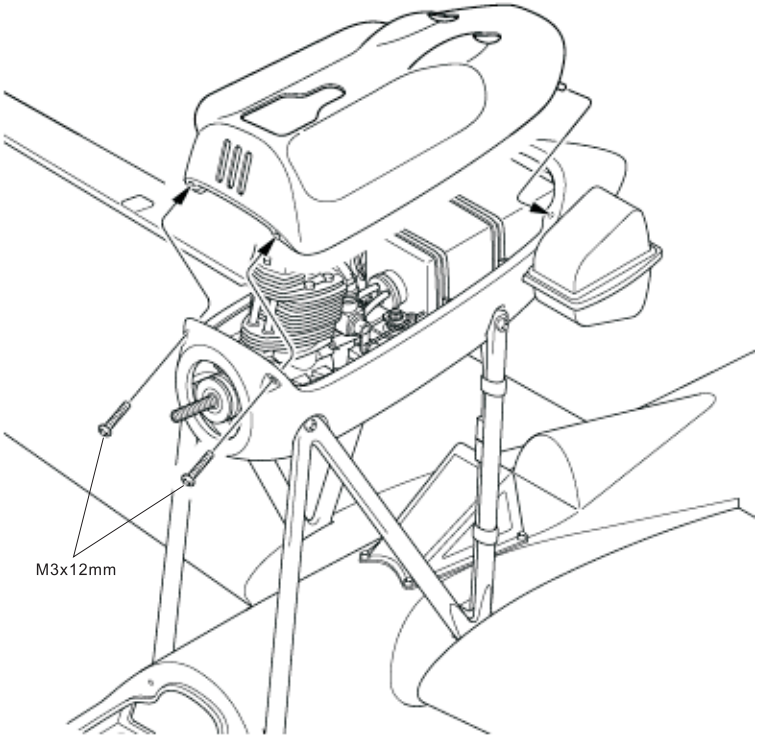

根据发动机说明书的指引来安装消音器.
Refer to engin's instruction manual and install muffler.

22 螺旋桨, 桨罩 Propeller,Spinner

GP version

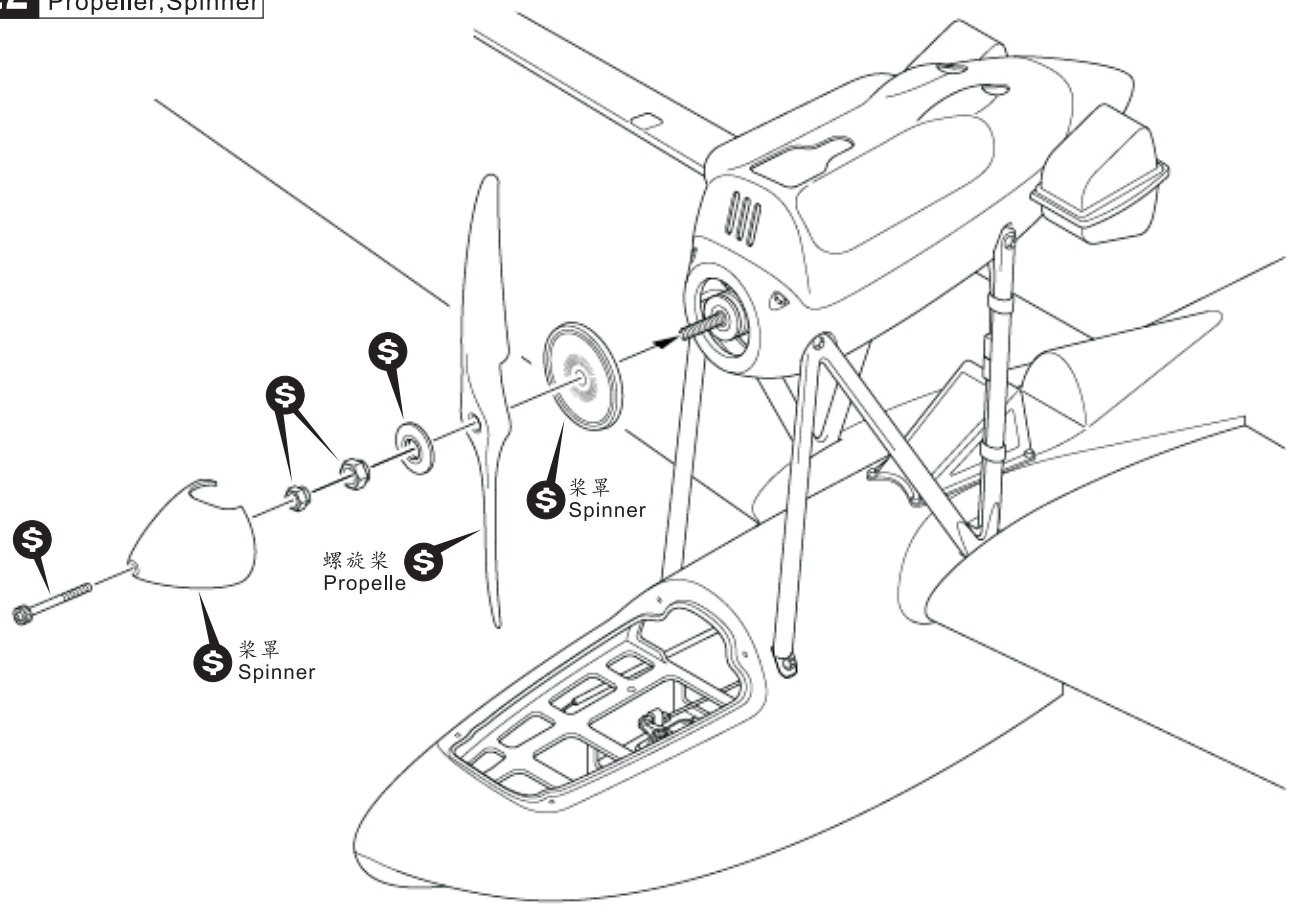

23 舱盖 Hatch

GP version

M3x12mm 机螺丝 Screw — 2

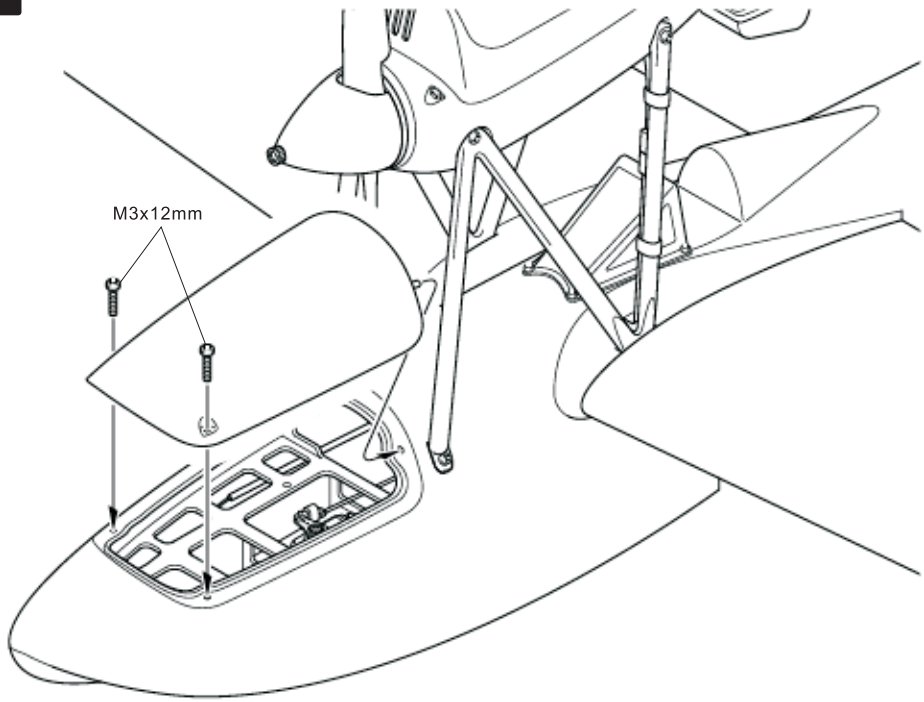

GP version 发动机版本.
For engine model version.

⇨ P22 34 浮筒 Float

24 引擎舱 Nacelle

EP version

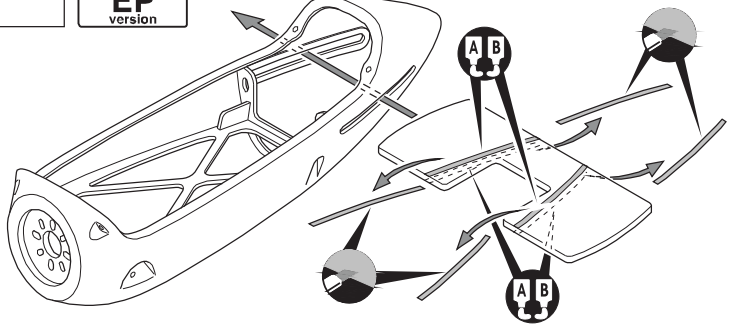

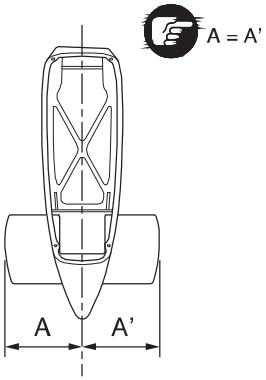

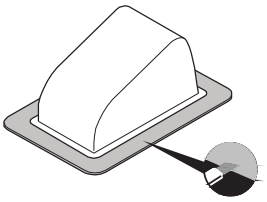

切除阴影部分.
Cut away film only, here.

x4

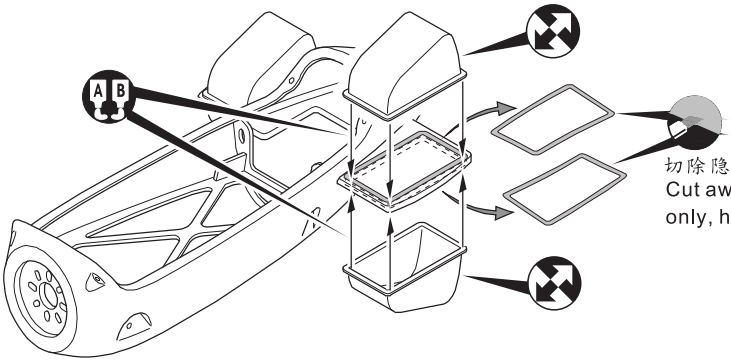

切除隐形部分.
Cut away film only, here.

L R

25 电动机 Motor

EP version

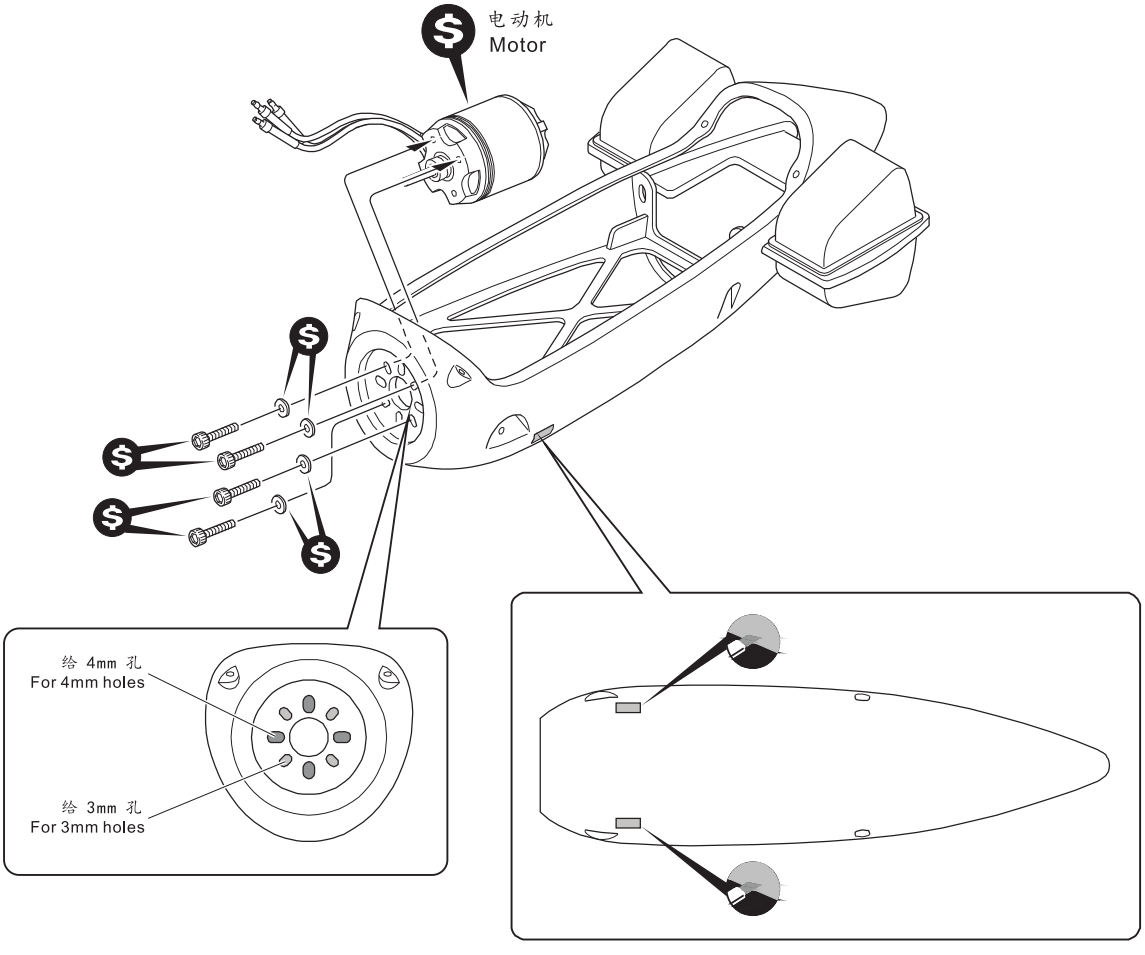

25 电子调速器 Electric Speed Controller

EP version

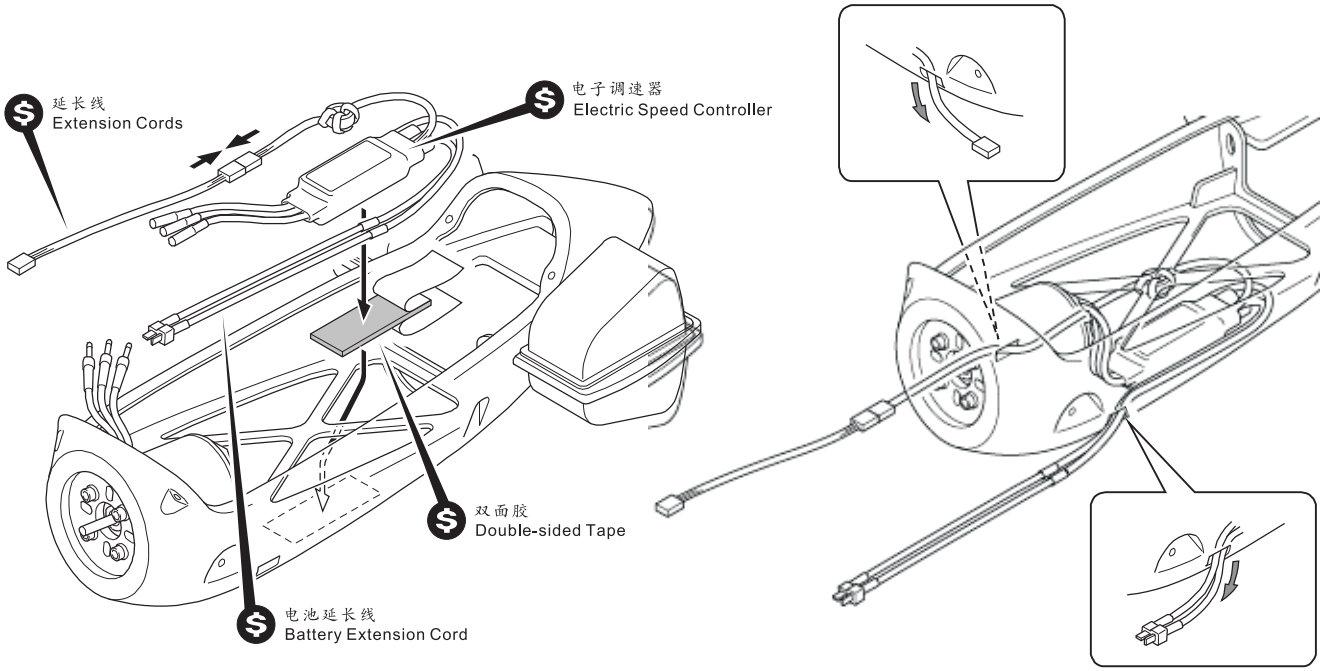

27 电机舱 Nacelle

EP version

M3x16mm 机螺丝 Screw — 4

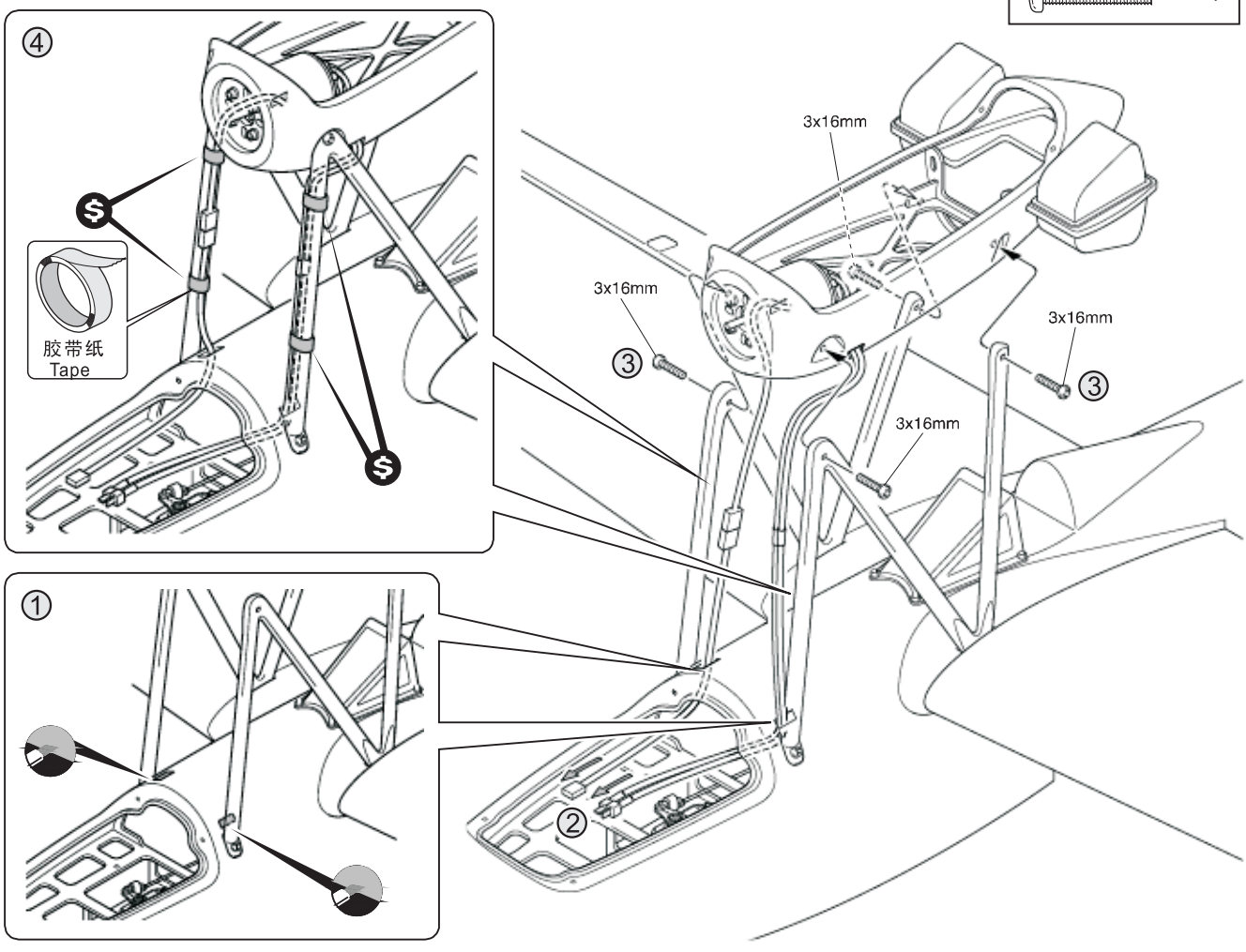

28 接收机, 电池 Receiver, Battery

EP version

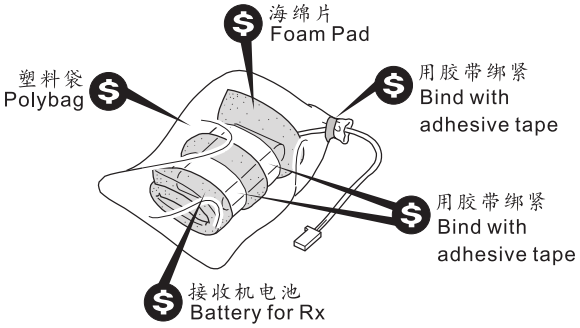

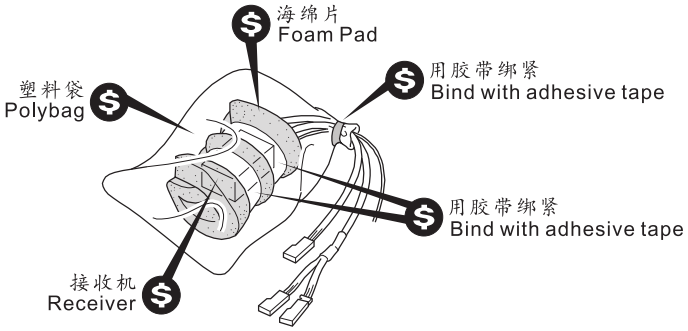

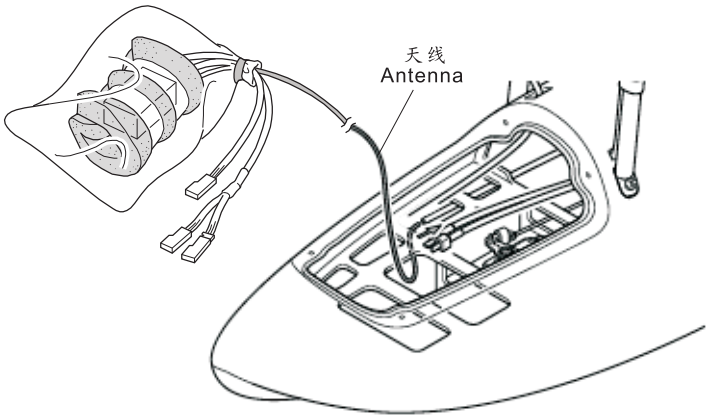

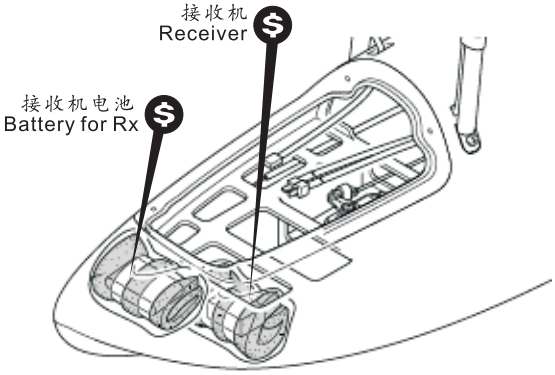

29 电池 Battery

EP version

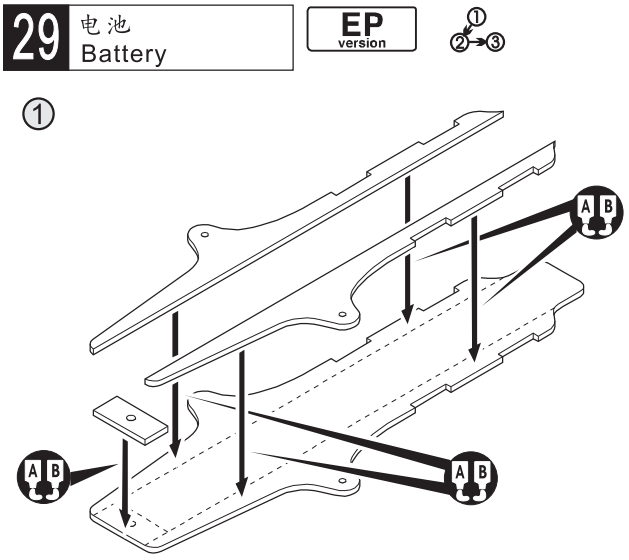

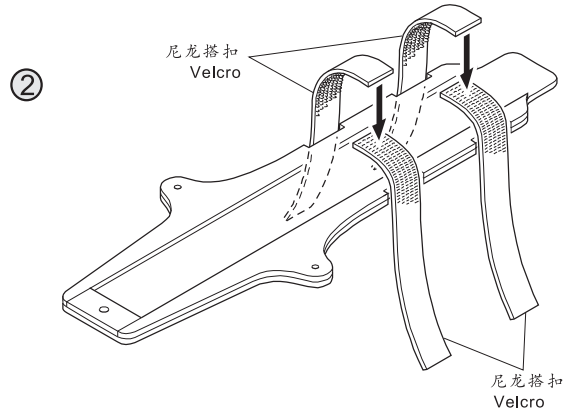

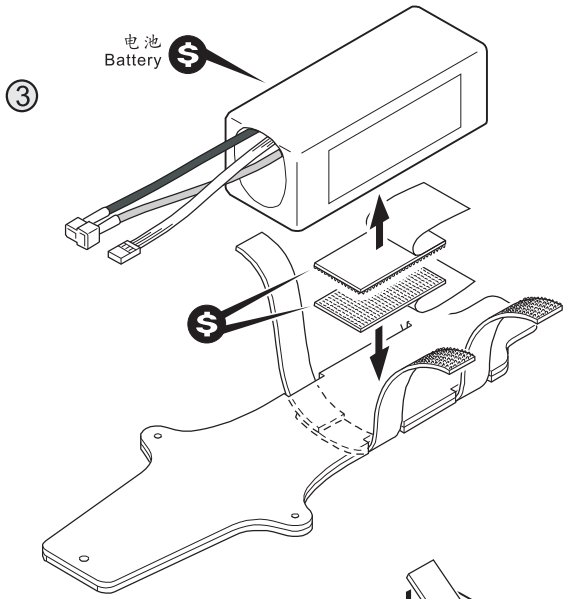

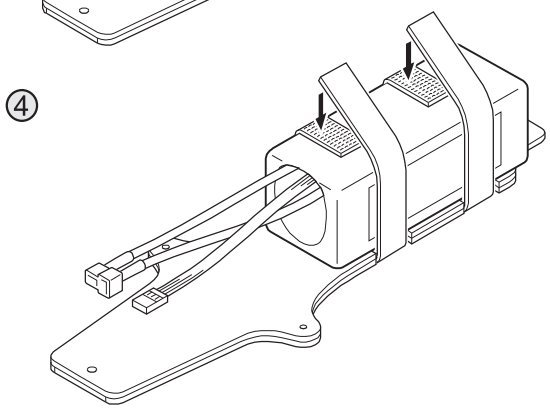

30 电池 Battery

EP version

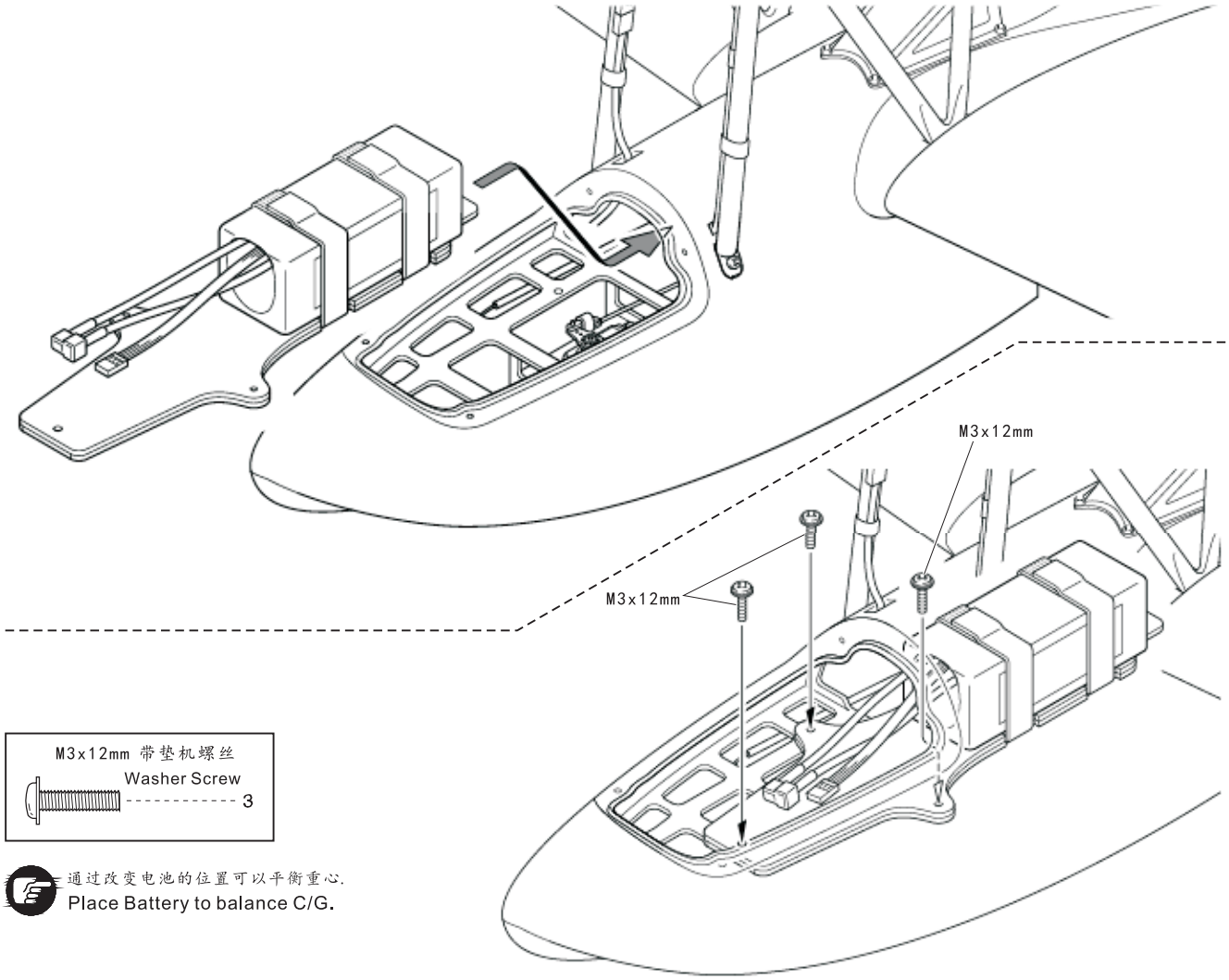

M3x12mm 带垫机螺丝
Washer Screw
3

通过改变电池的位置可以平衡重心.
Place Battery to balance C/G.

31 发动机舱盖 Nacelle Cover

EP version

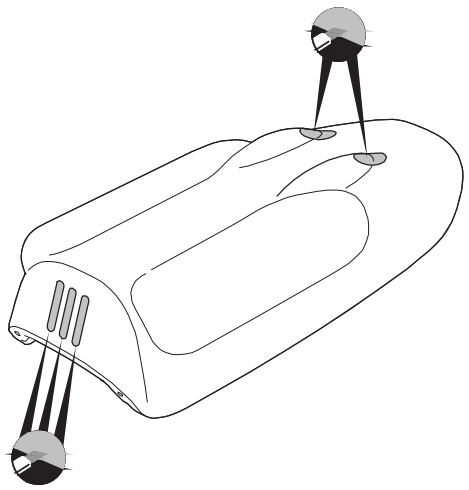

M3x12mm 机螺丝 Screw
2

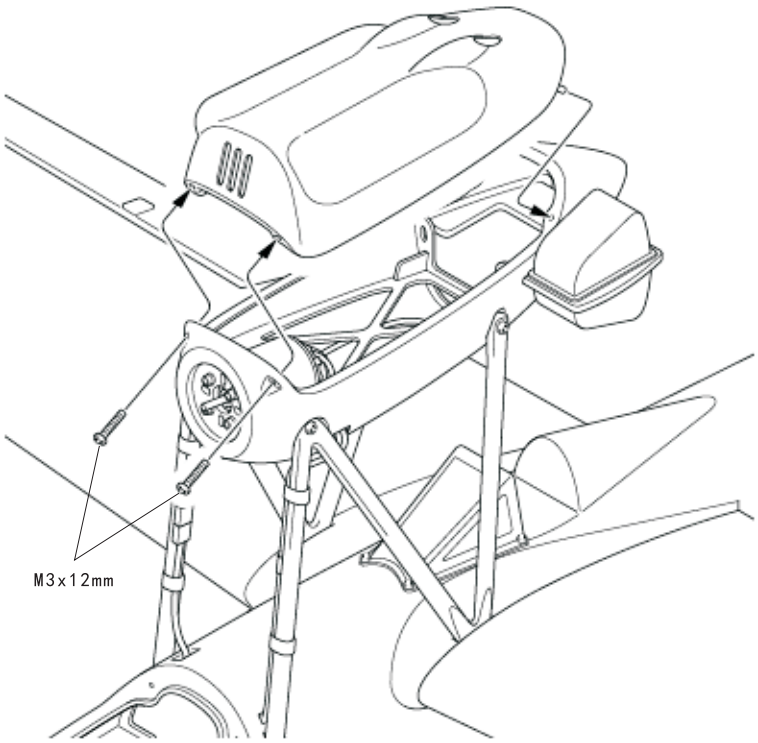

32 螺旋桨, 桨罩 Propeller, Spinner

EP version

警告 Warning!

电动版本注意, 在组装螺旋桨前务必断开电池.
Make sure the battery is disconnected before instsling the propeller.

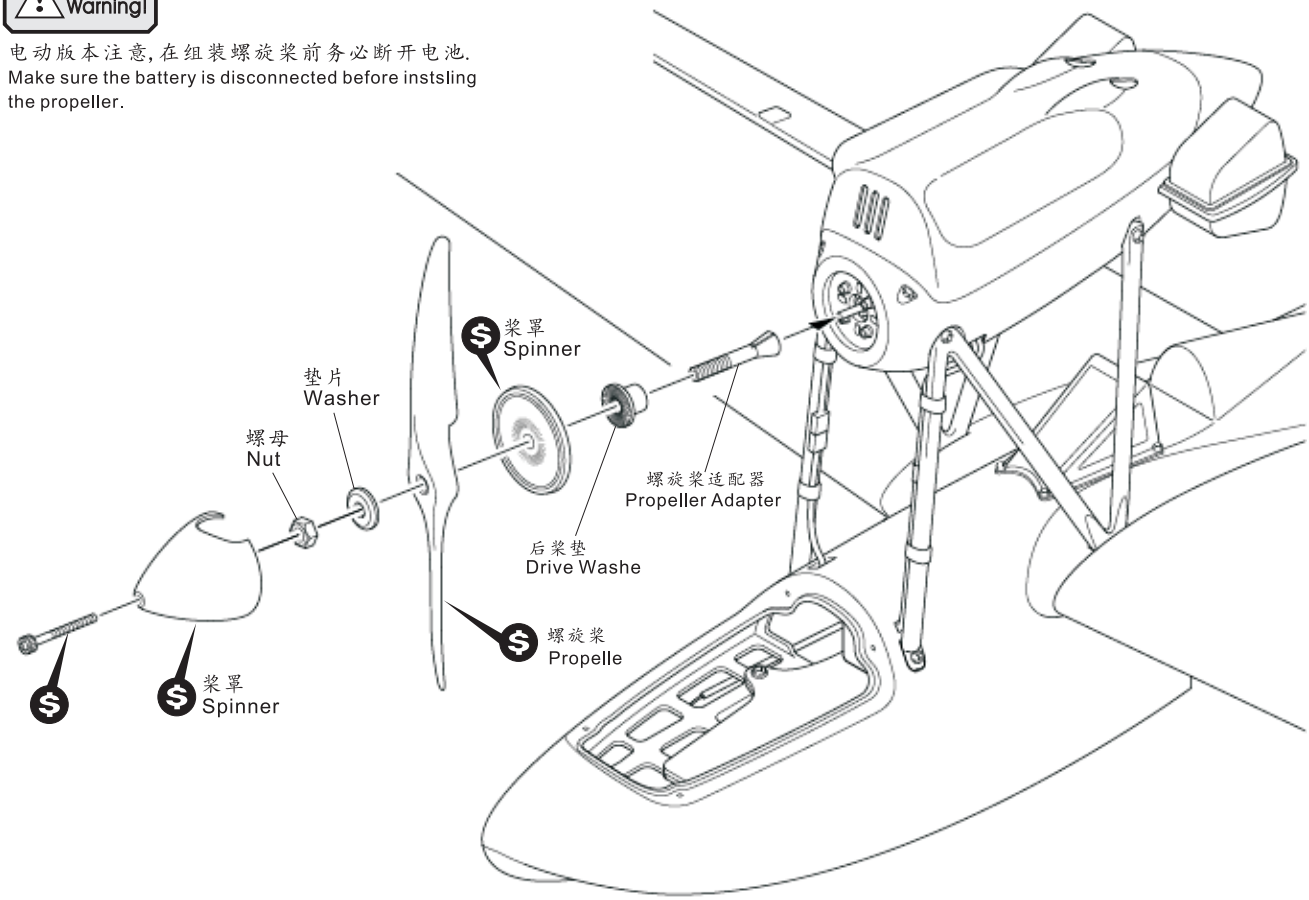

33 舱盖 Hatch

EP version

M3x12mm 机螺丝 Screw

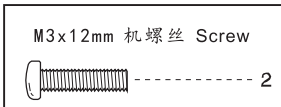

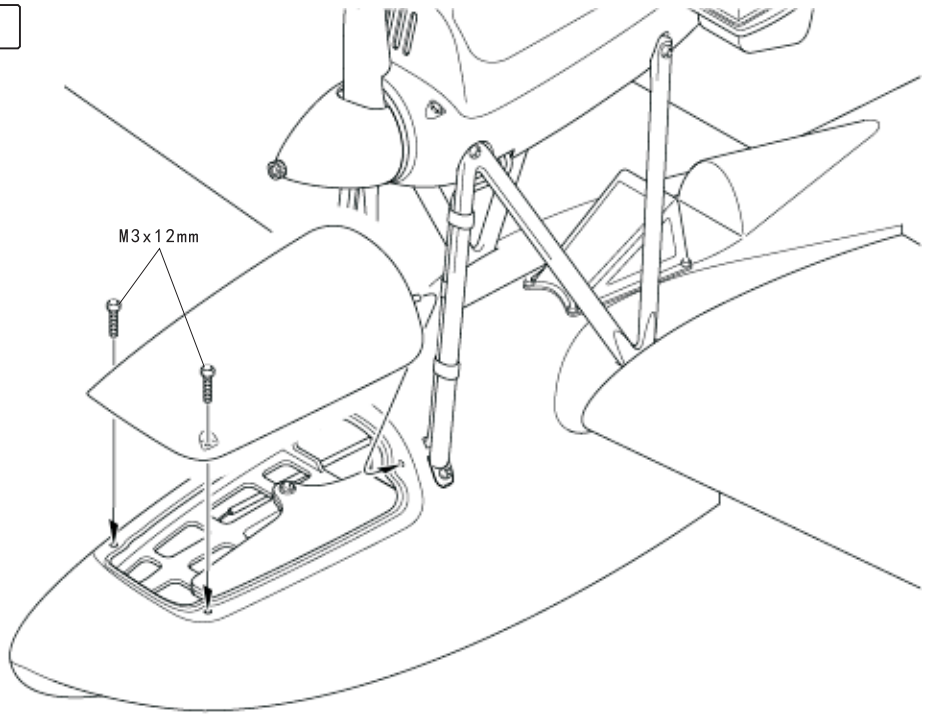

34 浮筒 Float

GP/EP version

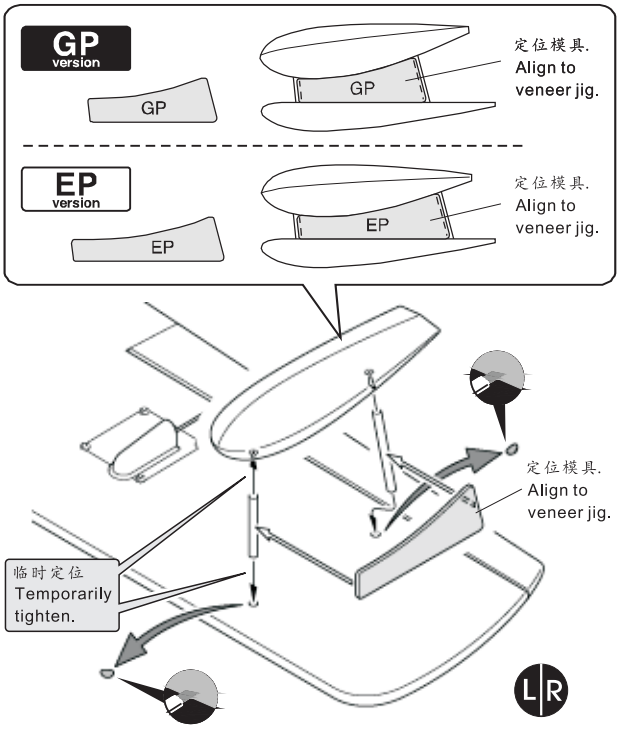

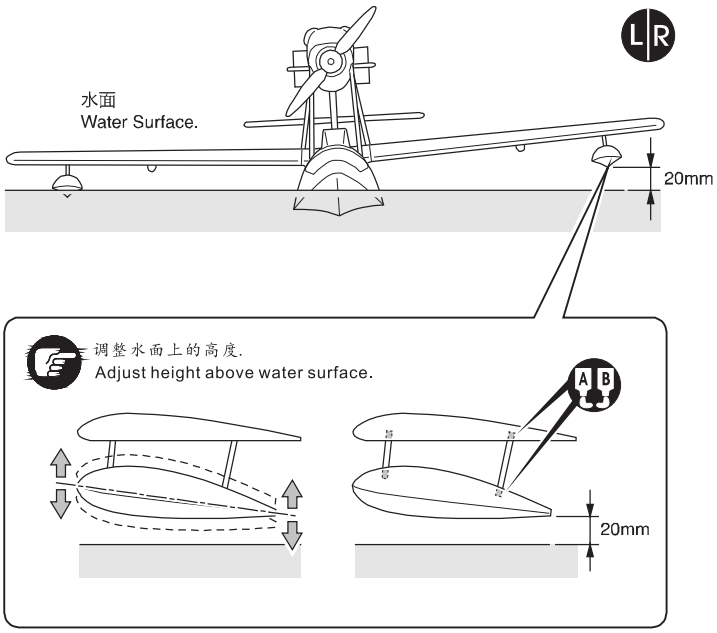

35 舵角调整 Adjustment

GP/EP version

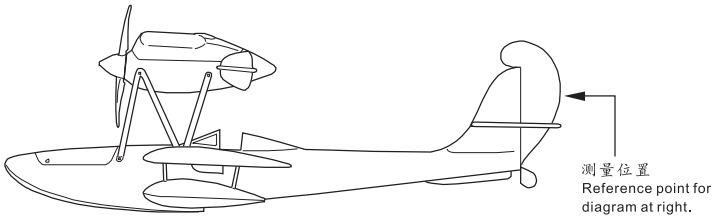

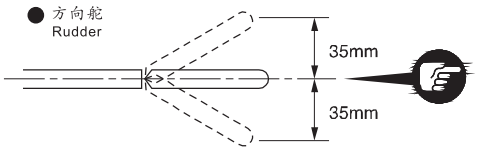

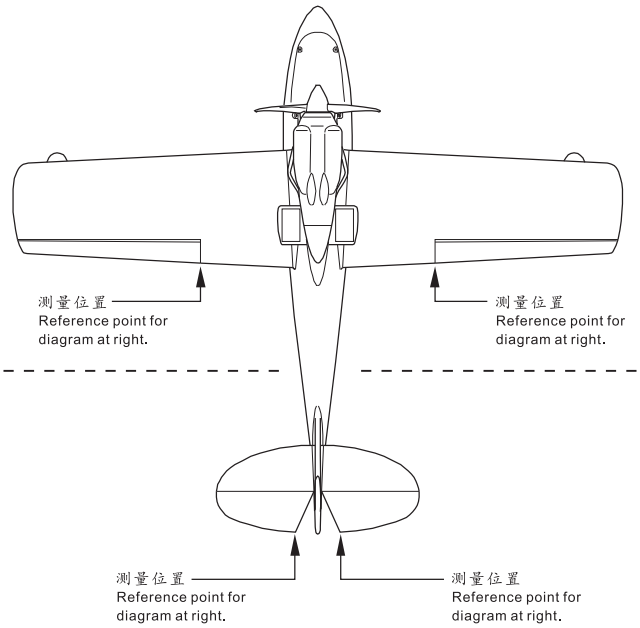

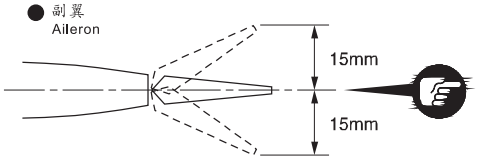

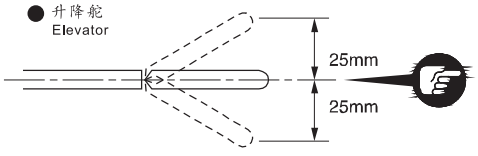

34 重心位置 C/G. position

GP/EP version

调整接收机和其他设备的前后位置，
来达到指定重心位置。
In order to obtain the CG specified, reposition the receiver and other equipment.

如果不能满足重心要求，请配重。
Use weights if the C/G cannot be not obtained.

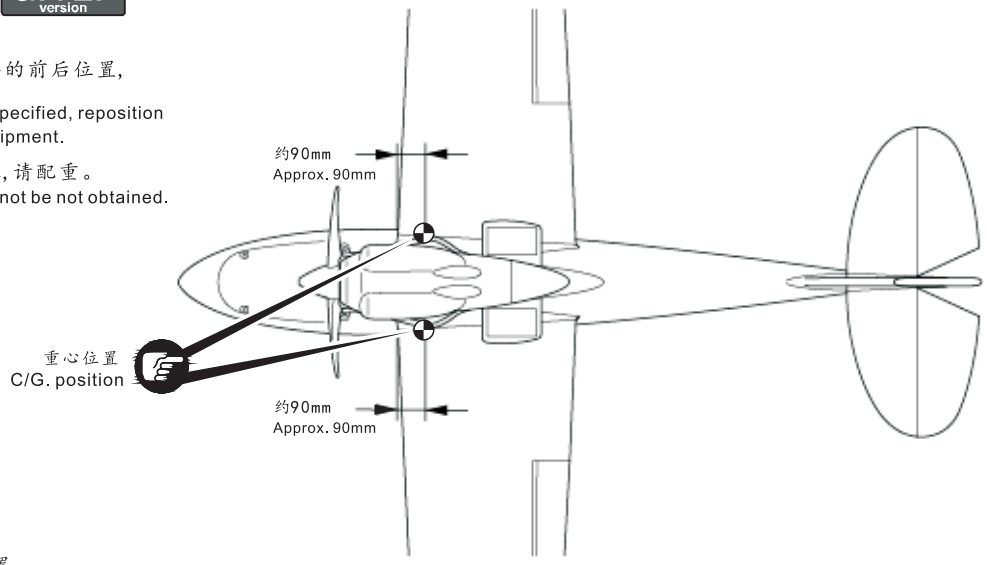

警告 Warning!

务必在飞行前确认正确重心位置。
如果重心位置不正确，你将失去对飞机控制，而导致事故！

Do not fly before confirming the correct location of the CG.
If the CG is incorrect, you lose control of your airplane which leads to accidents!

35 贴纸 Decal

GP/EP version

可以参考包装盒正面的照片来完成贴纸。
Apply included decals. For the correct placement of decals, please refer to box top.

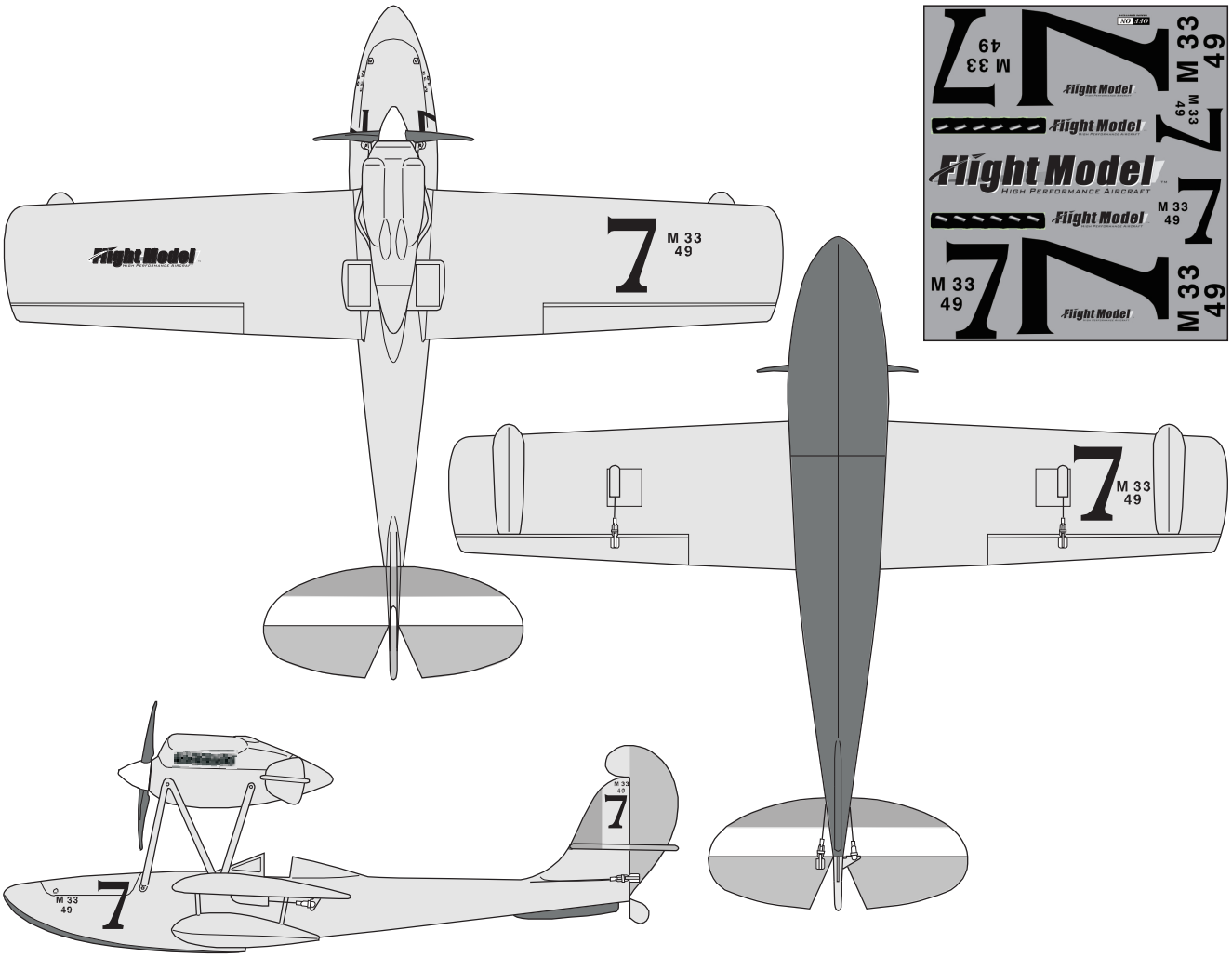

飞行操作的顺序

飞行前

要选择一个足够大的场地，不要靠近高压电缆、高大建筑物和飞机场。

请确认螺旋桨和桨罩都已经被安全的锁紧！

飞行前要确认没有相同频率的无线电设备在工作，否则将造成严重的事故！

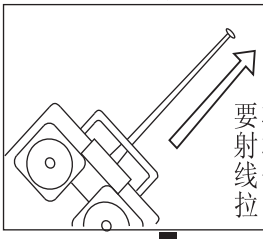

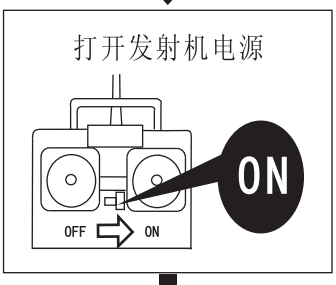

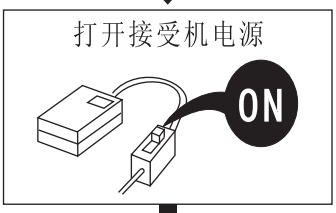

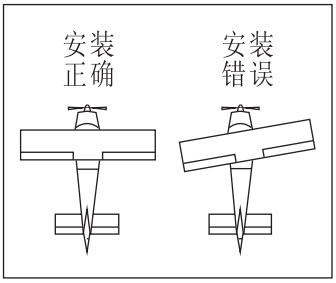

飞行

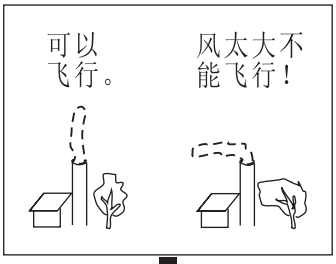

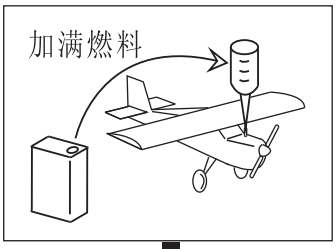

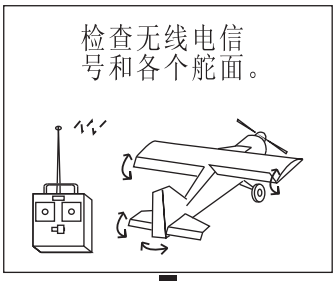

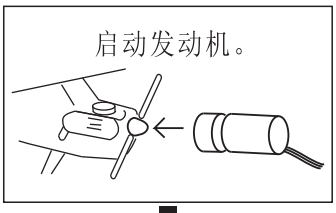

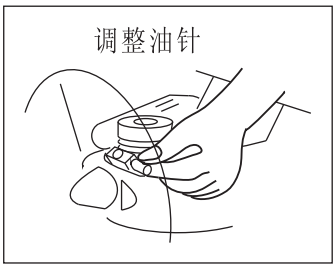

飞行后

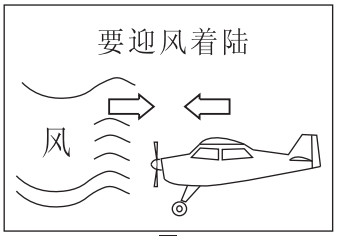

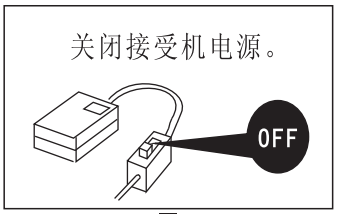

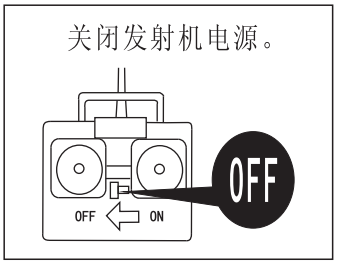

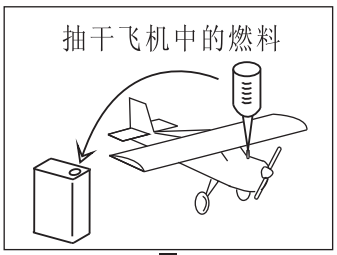

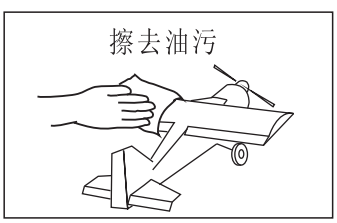

安全警告

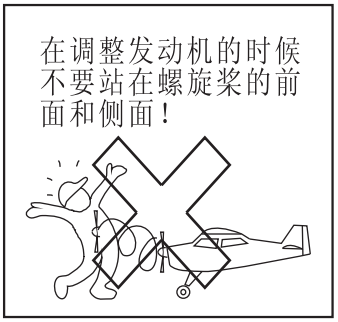

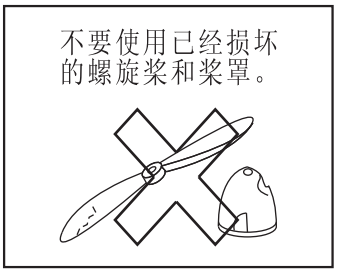

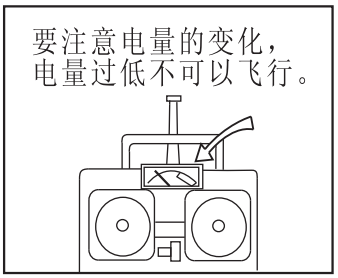

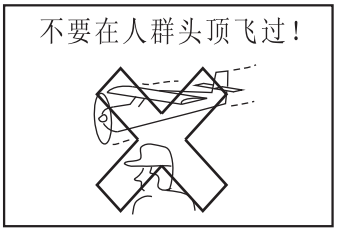

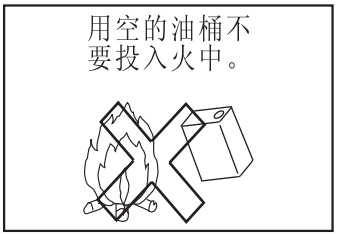

珠海飞翔模型有限公司 地址：广东省珠海市南屏北山工业区南牌坊街6号

ADD:6# Nanpaifang street,Beishan Industry Area,Nanping,Zhuhai,Guangdong.China 邮编(P.C.)：519060

Email：zhflightmodel@163.com 电话(Tel)：86-756-8815300 传真(Fax)：86-756-8815600

PRINTED IN CHINA