Instruction Manual

PHOENIX MODEL®

GP version

EP version

Sbach 342

GP/EP .46-.55 SCALE 1:5 ¼ ARF

SPECIFICATION
- Wingspan: 1405mm (55.3 in)
- Length: 1405mm (55.3 in)
- Flying weight: 2800-3000 gr
- Wing area: 39.4 dm2
- Wing loading: 71g/dm2
- Wing type: Naca airfoils
- Covering type: Genuine ORACOVER®
- Gear type: Aluminum Hi-grade for main gear and spring wire for tail gear (included)
- Spinner size: Plastic 58mm (included)
- Radio: 4 channel minimum (not included)
- Servo: 5 standard servo: 2 aileron; 1 elevator; 1 rudder; 1 throttle (not included)
- Recommended receiver battery: 4.8-6V / 800-1200mAh NiMH (not included)
- Servo mount: 21mm x 42 mm
- Propeller: suit with your engine
- Engine: .46-.55 / 2-stroke or .52/4-stroke glow engine (not included)
- Motor: brushless outrunner 1000-1400 W, 480 KV (not included)
- Gravity CG: 95-100 mm (3.7-3.9 in) Back from the leading edge of the wing, at the fuselage
- Control throw Ailerons: Low: 11mm up/down, 10% expo; High: 14mm up/down, 10% expo
- Control throw Elevators: Low: 11mm up/down, 12% expo; High: 14mm up/down, 12% expo
- Control throw Rudder: Low: 25mm right/left, 15% expo; High: 40mm right/left, 15% expo
- Experience level: Intermediate
- Plane type: Scale Aerobatic

RECOMMENDED MOTOR AND BATTERY SET UP
- Motor: RIMFIRE .46-.55 (not included)
- Lipo cell: 6 cells / 4000 – 5500mAh (not included)
- Esc: 50-70A (not included)

TABLE OF CONTENTS

Introduction 1
Warranty.....2
Disclaimer.....2
Safety precaution 2
Important building notes.....2
Suggestion.....2
Flight warnings.....2
Flight warnings.....3
Covering tools.....3
Adhesives and required tools 3
Academy of model aeronautics national
model aircraft safety code.....3
Installing the main landing gear 5
Preparations 8
Installing the ailerons 8
Installing the aileron servos.....9
Installing the control horns.....10
Installing the aileron linkages 10
Secure the wing to the fuselage.....12
Horizontal and vertical stabilizer installation 13
Installing rudder and tail gear 15
Installing the rudder pushrod 16
Installing the elevator pushrod 18
Installing the engine mount 21
Installing the fuel tank 22
Installing the throttle pushrod servo 23
Installing the engine 24
Installing the throttle 25
Mounting the cowl 27
Installing the spinner 28
Installing the receiver and battery 28
Installing the switch 28
Installing the electric motor 29
Balancing 32
Lateral balance 32
Control throws 33
Flight preparation pre flight check 33
For your radio installation
Basic connection for airplane
And adjustment of servos.....34
Main gear dimensional detail 35
Tail gear dimensional detail 35
Decoration 36
Exploded view 37
Exploded view 38

INTRODUCTION

Thank you for purchasing Phoenix Model products. With over 20 years experience in production and fly testing, Phoenix Model is committed to bring the best quality products and good service to customers. Along with a team of creative engineers and skilled workers, we will always accompany with customers by our great experiences, fully enthusiasm... which will burn our passion!! Joining with us to explore and conquer challenges in the sky ...

Your satisfaction is our success. Please read through this manual before starting construction.

Academy of Model Aeronautics: If you are not already a member of the AMA, please join! The AMA is the governing body of model aviation and membership provides liability insurance coverage, protects modelers' rights and interests and is required to fly at most R/C sites.

Academy of Model Aeronautics
5151 East Memorial Drive Muncie, IN 47302-9252

Tele. (800) 435-9262
Fax (765) 741-0057

Or via the Internet at: http://www.modelaircraft.org

AMA
SINCE 1936

WARRANTY

Phoenix Model guarantees the component parts in this kit to be free from defects in both material and workmanship at the date of purchase by the purchaser.

This warranty does not cover cosmetic damage or damage due to acts of God, accident, misuse, abuse, negligence, commercial use, or modification of or to any part of the Product.
This warranty does not cover damage due to improper installation, operation, maintenance, or attempted repair by anyone other than Phoenix Model.

Further, Phoenix Model reserves the right to change or modify this warranty without notice.

DISCLAIMER

Read this disclaimer carefully before using this product. Please strictly follow the instruction manual to assemble and use this.

In that Phoenix Model has no control over the final assembly or material used for final assembly, Phoenix Model is not responsible for loss of use , or other incidental or consequential damages.
Furthermore, Phoenix Model cannot be held liable for personal injury or property damage caused by the use or misuse of Phoenix Model products. By the act of using the user-assembled products, the user accepts all resulting liability.

SAFETY PRECAUTION

- This is not a toy and pilots must be over the age of 14
- Be sure that no other flyers are using your radio frequency.
- Do not smoke near fuel
- Store fuel in a cool, dry place, away from children and pets.
- Wear safety glasses.
- The glow plug clip must be securely attached to the glow plug.
- Do not flip the propeller with your fingers.
- Keep loose clothing and wires away from the propeller.
- Do not start the engine if people are near. Do not stand in line with the side of the propeller.
- Make engine adjustments from behind the propeller only. Do not reach around the spinning propeller.
- Moisture causes damage to electronics. Avoid water exposure to all equipment not specifically designed and protected for this purpose.

IMPORTANT BUILDING NOTES

- Please trial fit all the parts. Make sure you have the correct parts and that they fit and are aligned properly before gluing! This will assure proper assembly. This kit is hand made from natural materials, every plane is unique and minor adjustments may have to be made. However, you should find the fit superior and assembly simple.

- The painted and plastic parts used in this kit are fuel proof. However, they are not tolerant of many harsh chemicals including the following: paint thinner, C/A glue accelerator, C/A glue debonder and acetone. Do not let these chemicals come in contact with the colors on the covering and the plastic parts.

- Some parts included in this kit such as the cowl or wheel pants are made of fiberglass, the fibers of which may cause eye, skin and respiratory tract irritation. Never blow into a part to remove fiberglass dust, as the dust will blow back into your eyes. Always wear safety goggles, a particle mask and rubber gloves when grinding, drilling and sanding fiberglass parts. Vacuum the parts and the work area thoroughly after working with fiberglass parts.

SUGGESTION

To avoid scratching your new airplane, do not unwrap the pieces until they are needed for assembly. Cover your workbench with an old towel or brown paper, both to protect the aircraft and to protect the table. Keep a couple of jars or bowls handy to hold the small parts after you open the bag.

FLIGHT WARNINGS

- Always operate in open areas, away from factories, hospitals, schools, buildings and houses etc.
- NEVER fly your aircraft close to people or built up areas.
- NEVER fly near power lines, aerials or other dangerous areas including airports, motorways etc.
- NEVER fly in wet conditions or on windy or stormy days.
- ALWAYS adjust the engine from behind the propeller, and do not allow any part of your body to be in line with the propeller.
- THE PROPELLER IS DANGEROUS Keep fingers, clothing (ties, shirt sleeves, scarves) or any other loose objects that could be caught or drawn in, away from the propeller. Take care at ALL times.
- NEVER use damaged or deformed propellers or spinners.
- Keep all onlookers (especially small children and animals) well back from the area of operation. This is a flying aircraft, which will cause serious injury in case of impact with a person or animal.
- DO NOT dispose of empty fuel containers on a fire, this can lead to an explosion.

FLIGHT WARNINGS

- When ready to fly, first extend the transmitter aerial.
- Switch on the transmitter.
- Switch on the receiver.
- Check that the wings are correctly fitted to the fuselage.
- Operate the control sticks on the transmitter and check that the control surfaces move freely and in the CORRECT directions.
- Check that the transmitter batteries have adequate power.
- ALWAYS take off into the wind.
- If the model does not respond correctly to the controls, land it as soon as possible and correct the fault.
- ALWAYS land the model INTO the wind, this ensures that the model lands at the slowest possible speed.
- Switch off the receiver.
- Switch off the transmitter.
- Empty the fuel tank after flying, fuel left in the tank can cause corrosion and lead to engine problems.

COVERING TOOLS

- Top Flite® MonoKote® Sealing Iron
- Top Flite Hot Sock Iron Cover
- Top Flite MonoKote Trim Seal Iron
- Top Flite MonoKote Heat Gun

ADHESIVES AND REQUIRED TOOLS

- Thin CA
- 30-minute epoxy
- 6-minute epoxy
- Threadlocker thread locking cement
- Mixing sticks
- Mixing cups (GPMR8056)
- Epoxy brushes
- Denatured alcohol
- Canopy Glue
- Felt-tipped pen or pencil
- Flat screwdriver
- Adjustable wrench
- Drill
- Hobby knife
- Masking tape
- Phillips screwdriver (large)
- Phillips screwdriver (small)
- Ruler
- Sandpaper
- Soldering iron
- Solder
- Hex wrench
- Drill bit: 1/16-inch (1.5mm), 5/64-inch (2mm), 1/8-inch (3,2mm), 3/16-inch (4,8mm),11/64-inch (4.5mm), 13/64-inch (5,2mm), 1/4-inch (6,4mm)

Academy of Model Aeronautics National Model Aircraft Safety Code

Effective January 1, 2014

A. GENERAL: A model aircraft is a non-human-carrying aircraft capable of sustained flight in the atmosphere. It may not exceed limitations of this code and is intended exclusively for sport, recreation, education and/or competition. All model flights must be conducted in accordance with this safety code and anyadditional rules specific to the flying site.

1. Model aircraft will not be flown:

(a) In a careless or reckless manner.

(b) At a location where model aircraft activities are prohibited.

2. Model aircraft pilots will:

(a) Yield the right of way to all human-carrying aircraft.

(b) See and avoid all aircraft and a spotter must be used when appropriate. (AMA Document #540-D.)

(c) Not fly higher than approximately 400 feet above ground level within three (3) miles of an airport without notifying the airport operator.

(d) Not interfere with operations and traffic patterns at any airport, heliport or seaplane base except where there is a mixed use agreement.

(e) Not exceed a takeoff weight, including fuel, of 55 pounds unless in compliance with the AMA Large Model Airplane program. (AMA Document 520-A.)

(f) Ensure the aircraft is identified with the name and address or AMA number of the owner on the inside or affixed to the outside of the model aircraft. (This does not apply to model aircraft flown indoors.)

(g) Not operate aircraft with metal-blade propellers or with gaseous boosts except for helicopters operated under the provisions of AMA Document #555.

(h) Not operate model aircraft while under the influence of alcohol or while using any drug that could adversely affect the pilot's ability to safely control the model.

(i) Not operate model aircraft carrying pyrotechnic devices that explode or burn, or any device which propels a projectile or drops any object that creates a hazard to persons or property.

Exceptions:

- Free Flight fuses or devices that burn producing smoke and are securely attached to the model aircraft during flight.
- Rocket motors (using solid propellant) up to a G-series size may be used provided they remain attached to the model during flight. Model rockets may be flown in accordance with the National Model Rocketry Safety Code but may not be launched from model aircraft.

- Officially designated AMA Air Show Teams (AST) are authorized to use devices and practices as defined within the Team AMA Program Document. (AMA Document #718.)

(j) Not operate a turbine-powered aircraft, unless in compliance with the AMA turbine regulations. (AMA Document #510-A.)

3. Model aircraft will not be flown in AMA sanctioned events, air shows or model demonstrations unless:

(a) The aircraft, control system and pilot skills have successfully demonstrated all maneuvers intended or anticipated prior to the specific event.

(b) An inexperienced pilot is assisted by an experienced pilot.

4. When and where required by rule, helmets must be properly worn and fastened. They must be OSHA, DOT, ANSI, SNELL or NOCSAE approved or comply with comparable standards.

B. RADIO CONTROL (RC)

1. All pilots shall avoid flying directly over unprotected people, vessels, vehicles or structures and shall avoid endangerment of life and property of others.
2. A successful radio equipment ground-range check in accordance with manufacturer's recommendations will be completed before the first flight of a new or repaired model aircraft.
3. At all flying sites a safety line(s) must be established in front of which all flying takes place. (AMA Document #706.)

(a) Only personnel associated with flying the model aircraft are allowed at or in front of the safety line.

(b) At air shows or demonstrations, a straight safety line must be established.

(c) An area away from the safety line must be maintained for spectators.

(d) Intentional flying behind the safety line is prohibited.

4. RC model aircraft must use the radio-control frequencies currently allowed by the Federal Communications Commission (FCC). Only individuals properly licensed by the FCC are authorized to operate equipment on Amateur Band frequencies.
5. RC model aircraft will not knowingly operate within three (3) miles of any pre-existing flying site without a frequency-management agreement. (AMA Documents #922 and #923.)
6. With the exception of events flown under official AMA Competition Regulations, excluding takeoff and landing, no powered model may be flown outdoors closer than 25 feet to any individual, except for the pilot and the pilot's helper(s) located at the flightline.
7. Under no circumstances may a pilot or other person touch an outdoor model aircraft in flight while it is still under power, except to divert it from striking an individual.
8. RC night flying requires a lighting system providing the pilot with a clear view of the model's attitude and orientation at all times. Hand-held illumination systems are inadequate for night flying operations.
9. The pilot of an RC model aircraft shall:

(a) Maintain control during the entire flight, maintaining visual contact without enhancement other than by corrective lenses prescribed for the pilot.

(b) Fly using the assistance of a camera or First-Person View (FPV) only in accordance with the procedures outlined in AMA Document #550.

(c) Fly using the assistance of autopilot or stabilization system only in accordance with the procedures outlined in AMA Document #560.

C. FREE FLIGHT

1. Must be at least 100 feet downwind of spectators and automobile parking when the model aircraft is launched.
2. Launch area must be clear of all individuals except mechanics, officials, and other fliers.
3. An effective device will be used to extinguish any fuse on the model aircraft after the fuse has completed its function.

D. CONTROL LINE

1. The complete control system (including the safety thong where applicable) must have an inspection and pull test prior to flying.
2. The pull test will be in accordance with the current Competition Regulations for the applicable model aircraft category.
3. Model aircraft not fitting a specific category shall use those pull-test requirements as indicated for Control Line Precision Aerobatics.
4. The flying area must be clear of all utility wires or poles and a model aircraft will not be flown closer than 50 feet to any above-ground electric utility lines.
5. The flying area must be clear of all nonessential participants and spectators before the engine is started.

INSTALLING THE MAIN LANDING GEAR

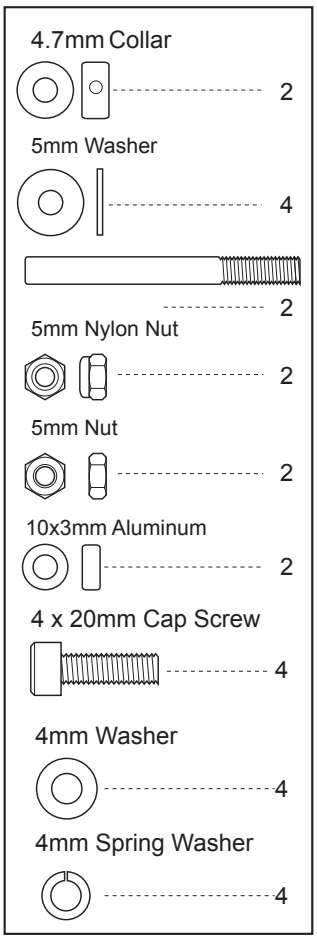

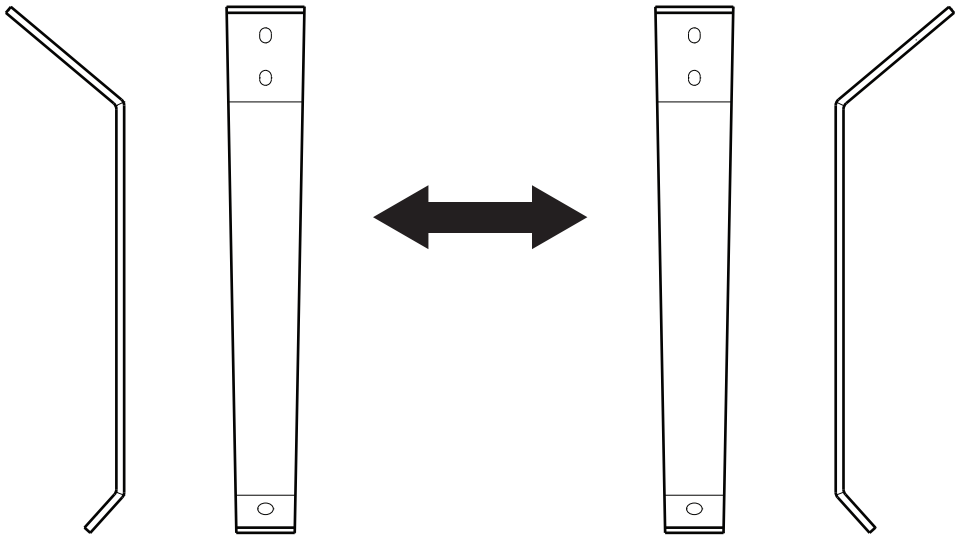

< Main Gear (R) > < Main Gear (L) >

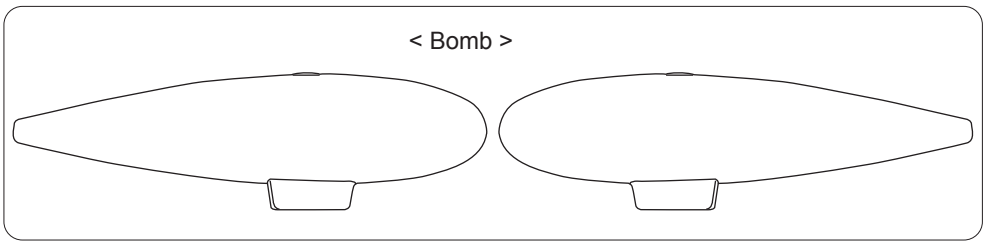

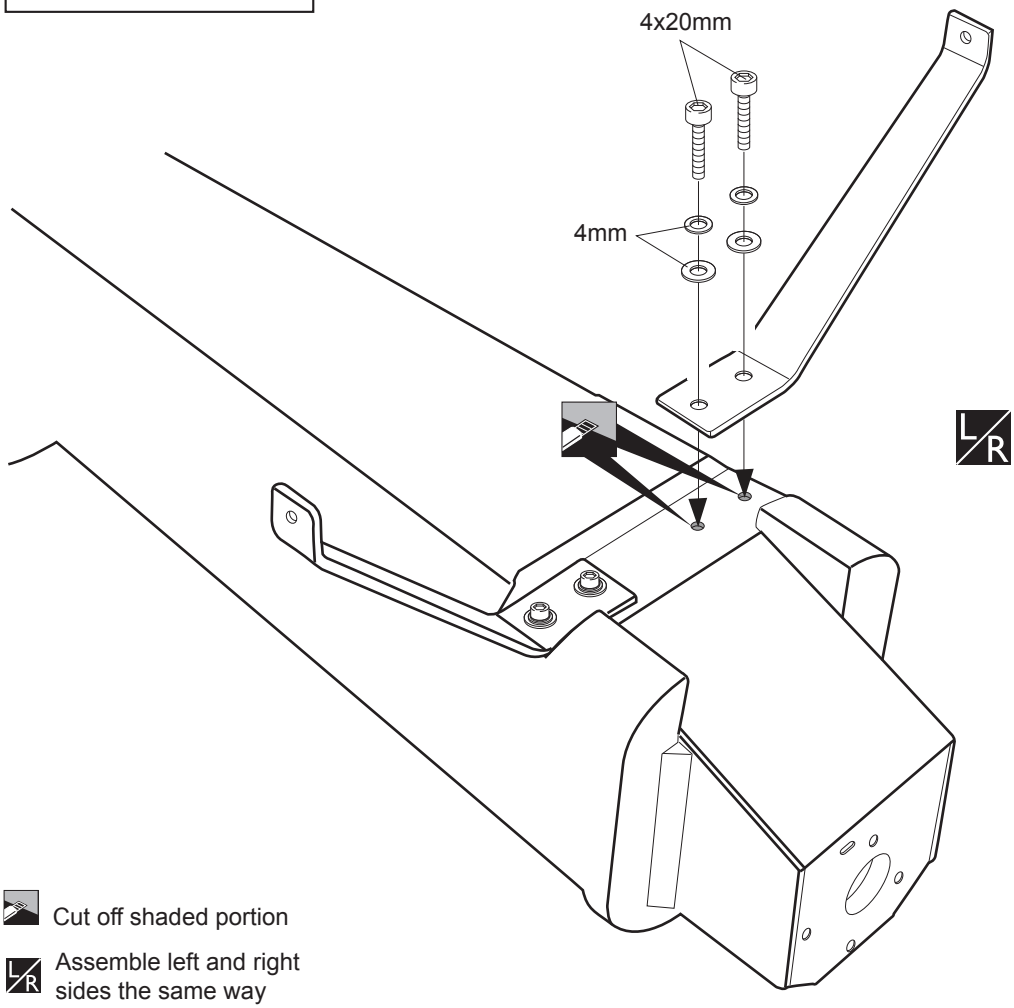

Cut off shaded portion

L/R Assemble left and right sides the same way

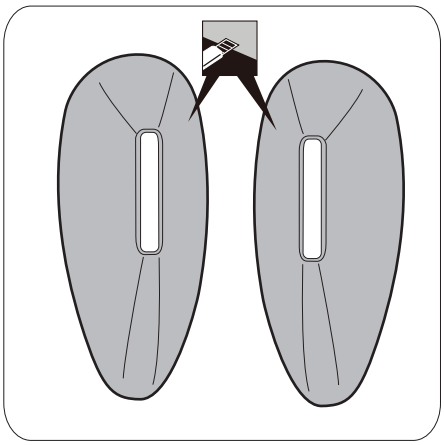

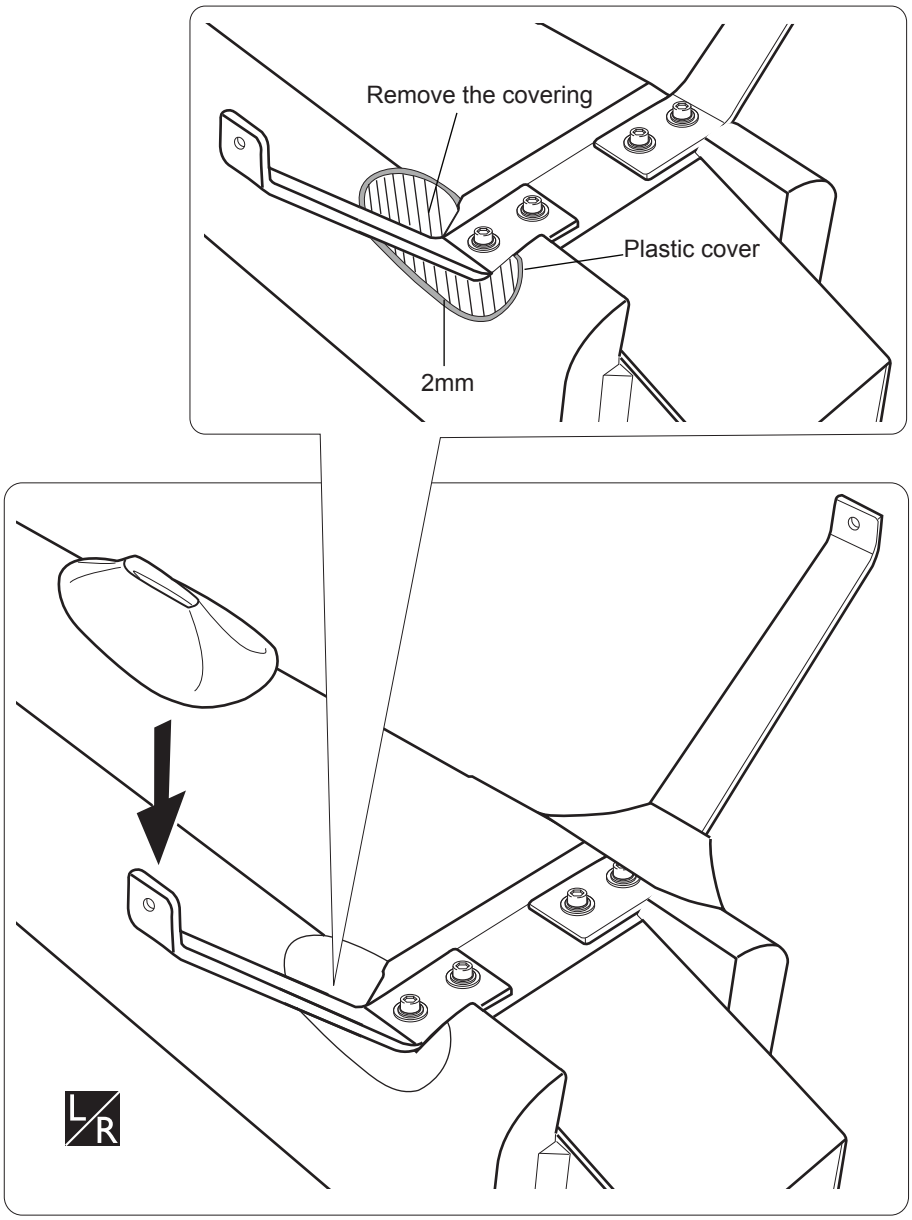

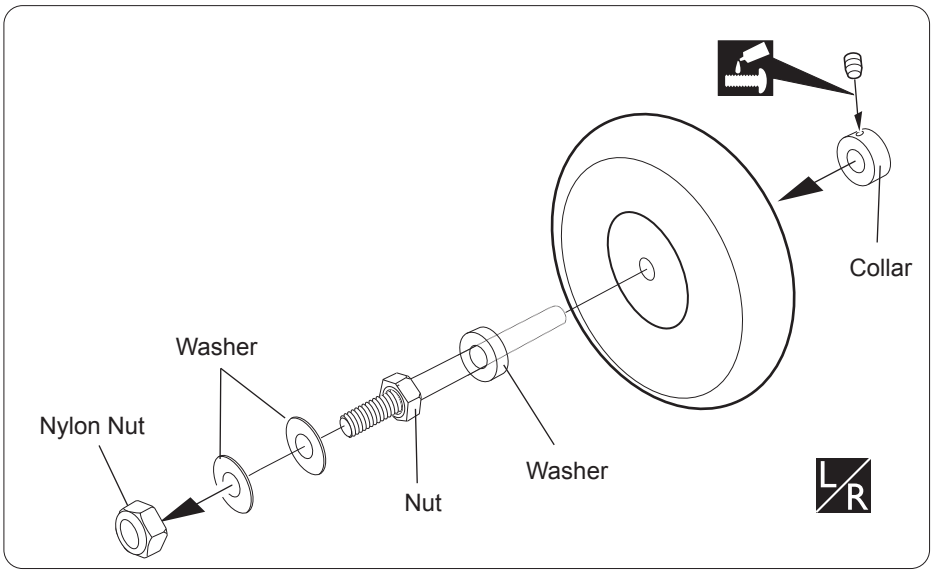

Apply threadlocker (screw cement).

Cut off shaded portion

Assemble left and right sides the same way

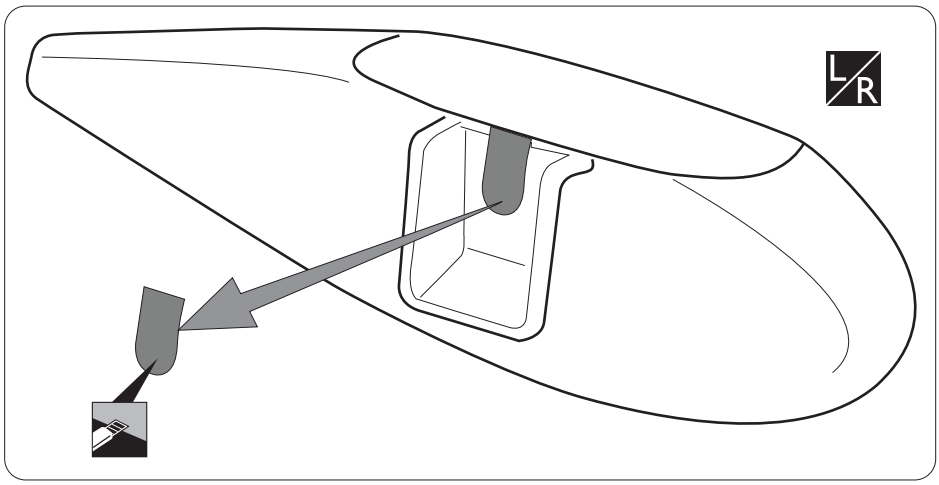

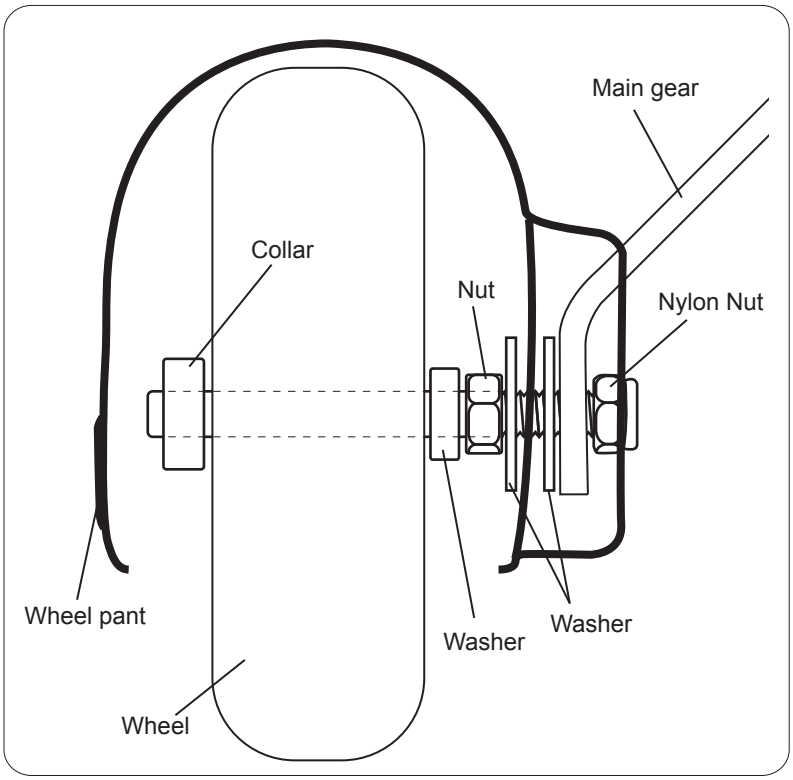

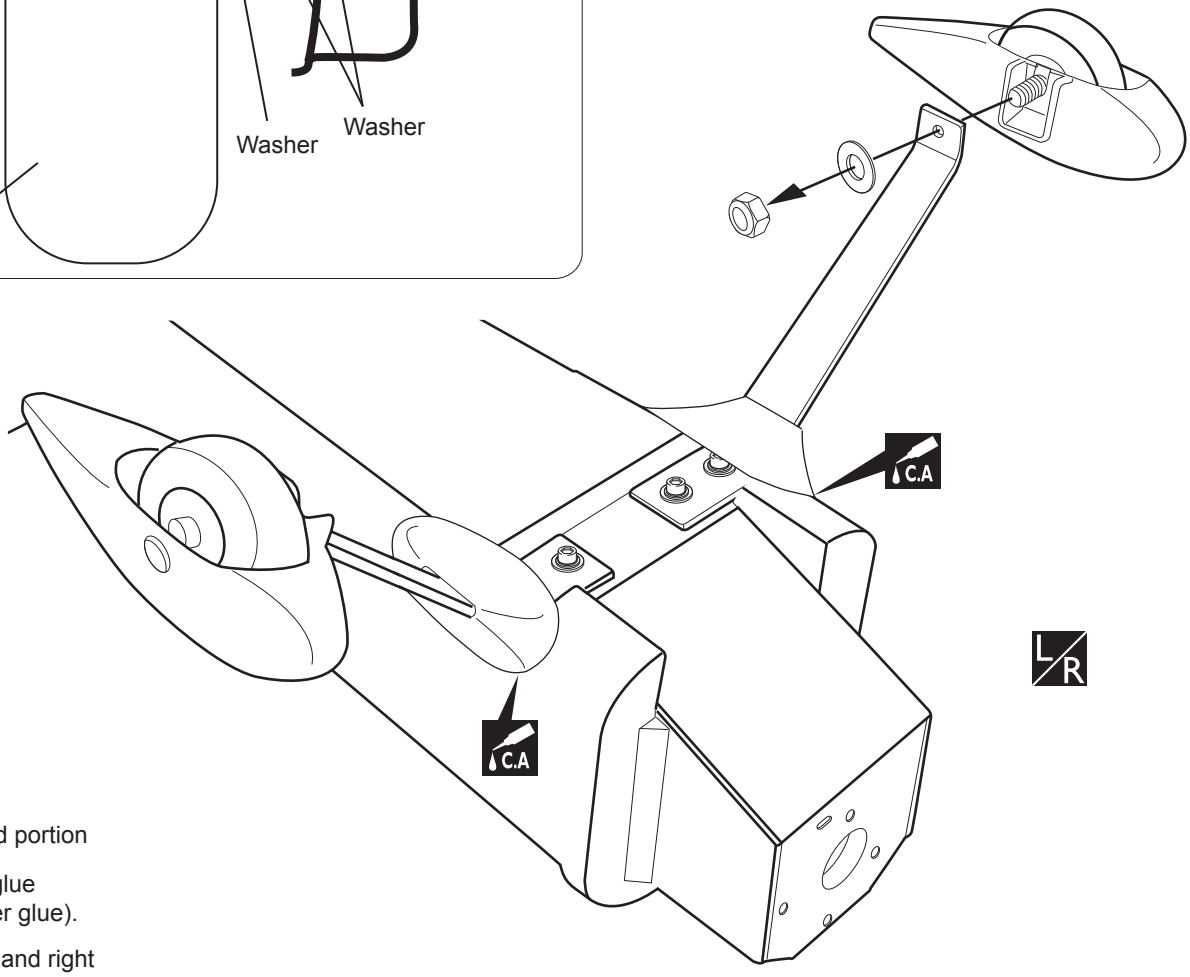

Cut off shaded portion

Apply instant glue (CA glue, super glue).

Assemble left and right sides the same way

PREPARATIONS

Use a covering iron with a covering sock on high heat to tighten the covering if necessary. Apply pressure over sheeted areas to thoroughly bond the covering to the wood.

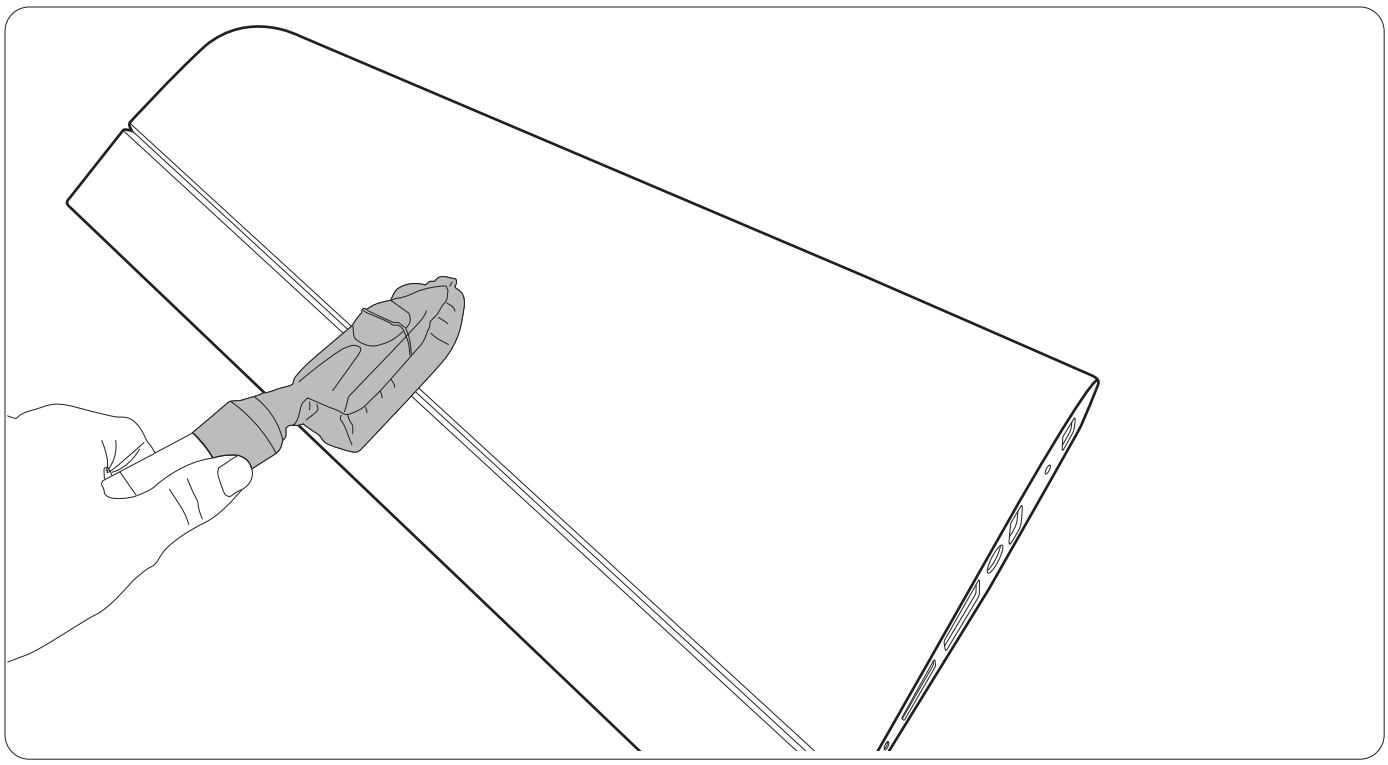

INSTALLING THE AILERONS

1. Test fit the ailerons to the wing with the hinges. If the hinges don't remain centered, stick a pin through the middle of the hinge to hold it in position.

2. Apply six drops of thin CA to the top and bottom of each hinge. Do not use CA accelerator. After the CA has fully hardened, test the hinges by pulling on the aileron.

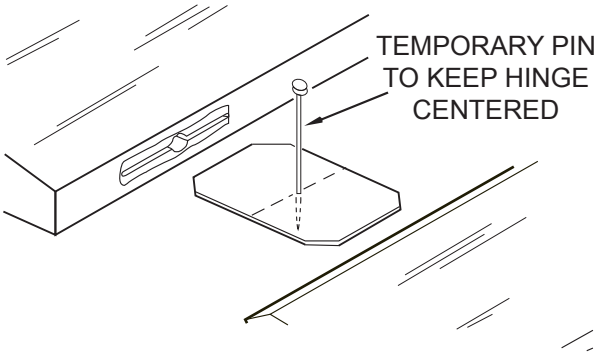

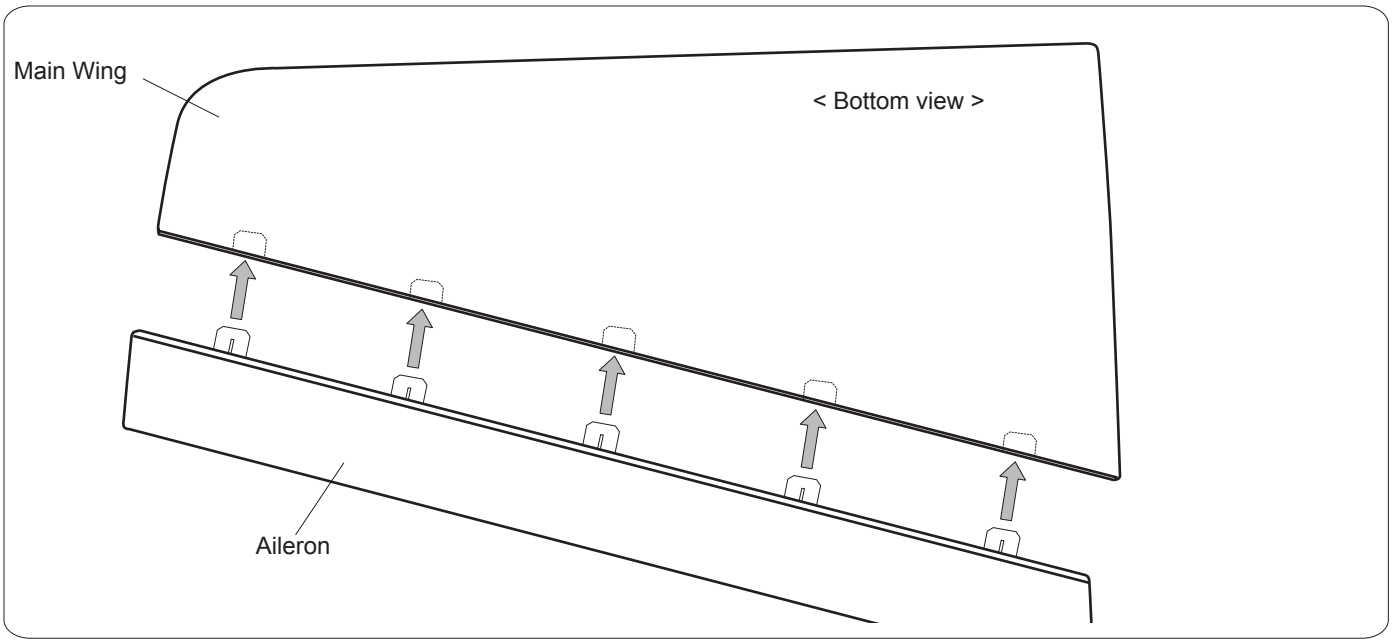

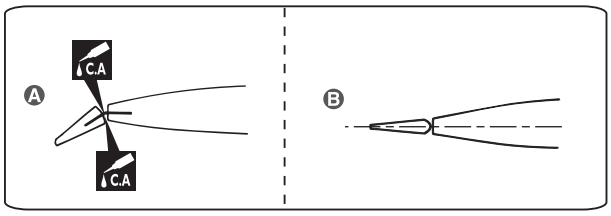

Apply instant glue (CA glue, super glue).

Warning!

► Make certain the hinges are adequately secured with glue. If they come loose in flight accidents may result.

Ⓐ Secure nylon hinges with instant glue, being careful not to glue the wing and airleron together.

Ⓑ Align the center line of main wing with aileron.

INSTALLING THE AILERONS SERVOS

1. Install the rubber grommets and brass eyelets onto the aileron servo.
2. Using a modeling knife, remove the covering from over the servo box.
3. Place the servo into the servo box. Center the servo and drill pilot holes through the block of wood for each of the four mounting screws provided with the servo.
4. Using the thread as a guide and using masking tape, tape the servo lead to the end of the thread: carefully pull the thread out. When you have pulled the servo lead out, remove the masking tape and the servo lead from the thread.
5. Repeat step # 2 - # 5 to install the second aileron servo in the opposite wing half.

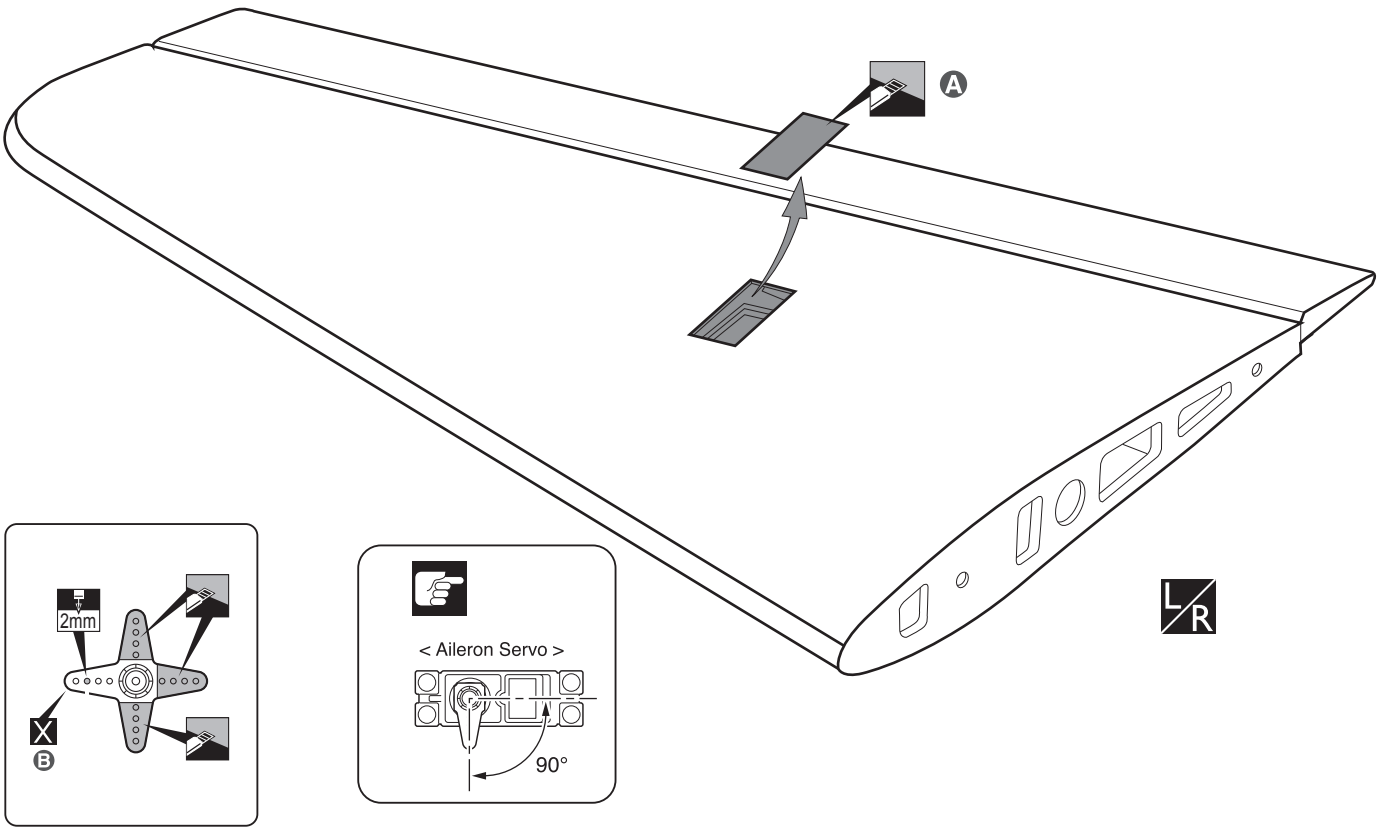

Ⓐ Cut away film only. here

Ⓑ Supplied with the servo

L/R Assemble left and right sides the same way

Cut off shaded portion

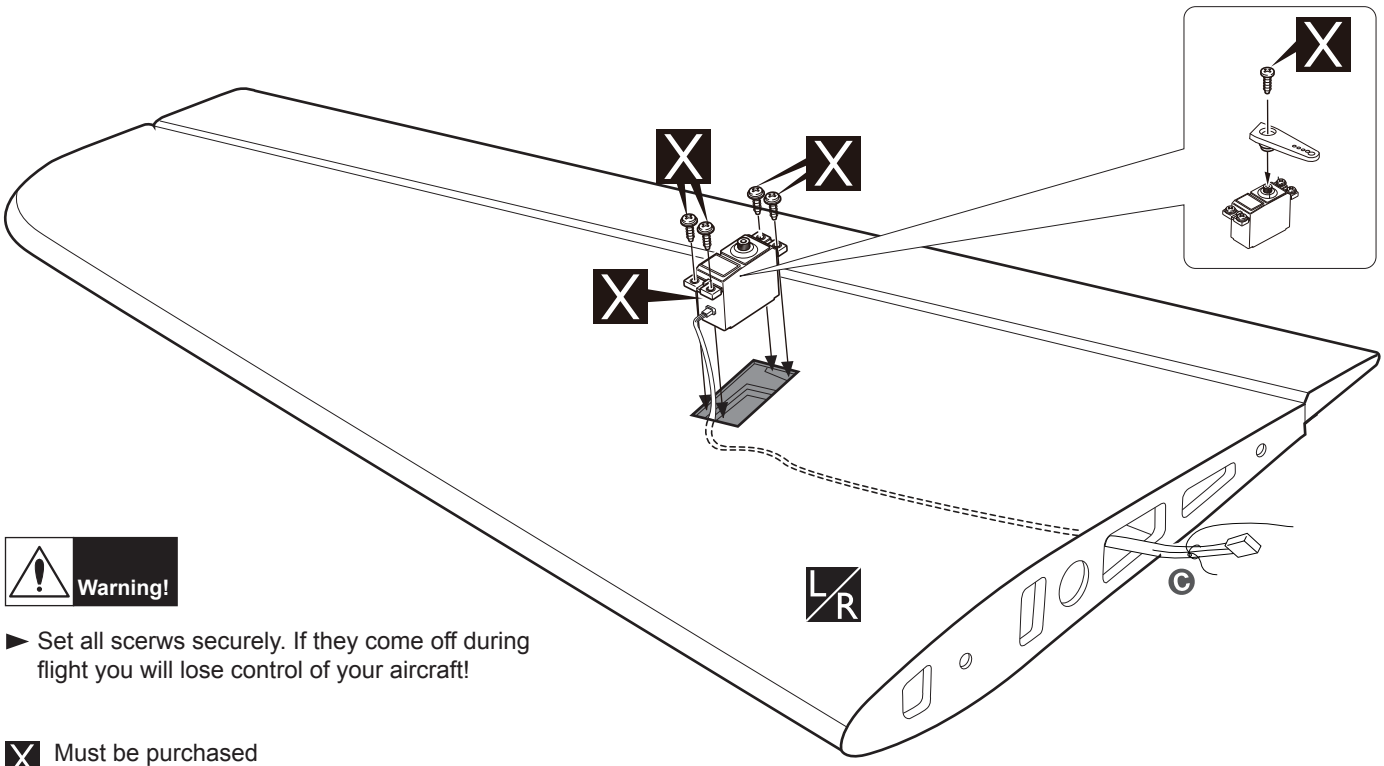

Warning!

► Set all scerws securely. If they come off during flight you will lose control of your aircraft!

X Must be purchased separately!

L/R Assemble left and right sides the same way

C Pull out servo cord with string.

INSTALLING THE CONTROL HORNS

1. One aileron control horn in positioned on each aileron. Using a ruler and a pen, locate and mark the location of the control horn. It should be mounted on the bottom side of the aileron at the leading edge, IN LINE with the aileron pushrod.

2. Drill two holes through the aileron using the control horn as a guide and screw the control horn in place.

3. Repeat step # 1 - # 2 to install the control horn on the opposite aileron.

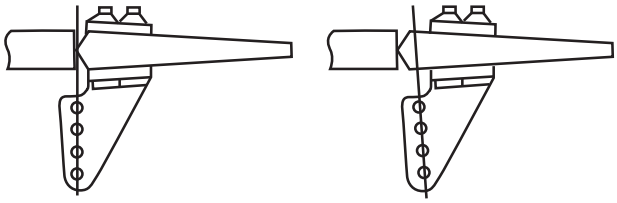

RIGHT WRONG

INSTALLING THE AILERON LINKAGES

1. Working with the aileron linkage for now, thread one nylon clevis onto one of the threaded wires.

2. Attach the clevis to the outer hole in the control horn.

3. Locate one nylon servo arm, and using wire cutters, remove all but one of the arms. Using a 2mm drill bit, enlarge the third hole out from the center of the arm to accommodate the aileron pushrod wire.

4. Plug the aileron servo into the receiver and center the servo. Install the servo arm onto the servo. The servo arm should be perpendicular to the servo and point toward the middle of the wing.

5. Center the aileron and hold it in place using a couple of pieces of masking tape.

6. With the aileron and aileron servo centered, carefully place a mark on the aileron pushrod wire where it crosses the hole in the servo arm.

7. Using pliers, carefully make a 90 degree bend down at the mark made. Cut off the excess wire, leaving about 6mm beyond the bend.

8. Insert the 90 degree bend down through the hole in the servo arm. Install one nylon snap keeper over the wire to secure it to the arm. Install the servo arm retaining screw and remove the masking tape from the aileron.

9. Repeat step # 4 - # 8 to install the second aileron linkage. After both linkages are completed, connect both of the aileron servo leads using a Y-harness you have purchased separately.

Plastic Control Horn
2
2

Kwik link (M2)
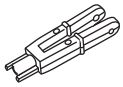 2

1.6 x 8mm TP Screw
2

Snap keeper
2

1.7x180mm Push rod
 2

2 x 20mm TP Screw
4

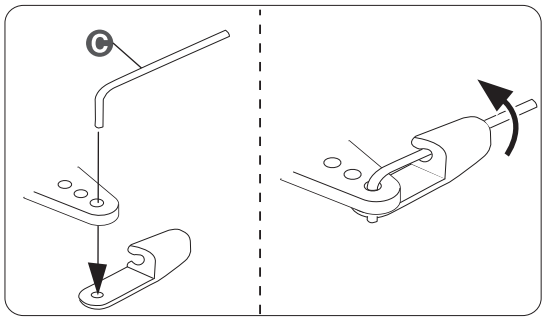

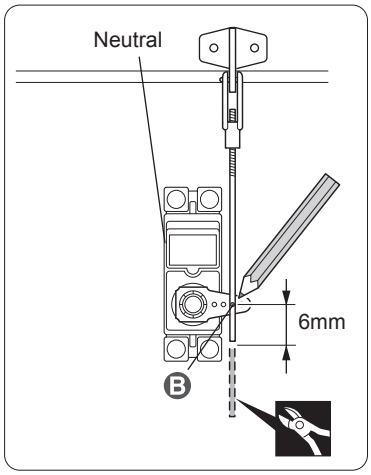

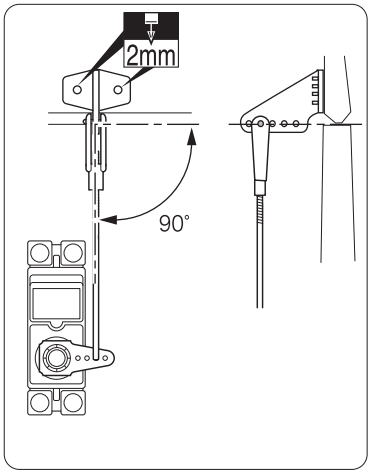

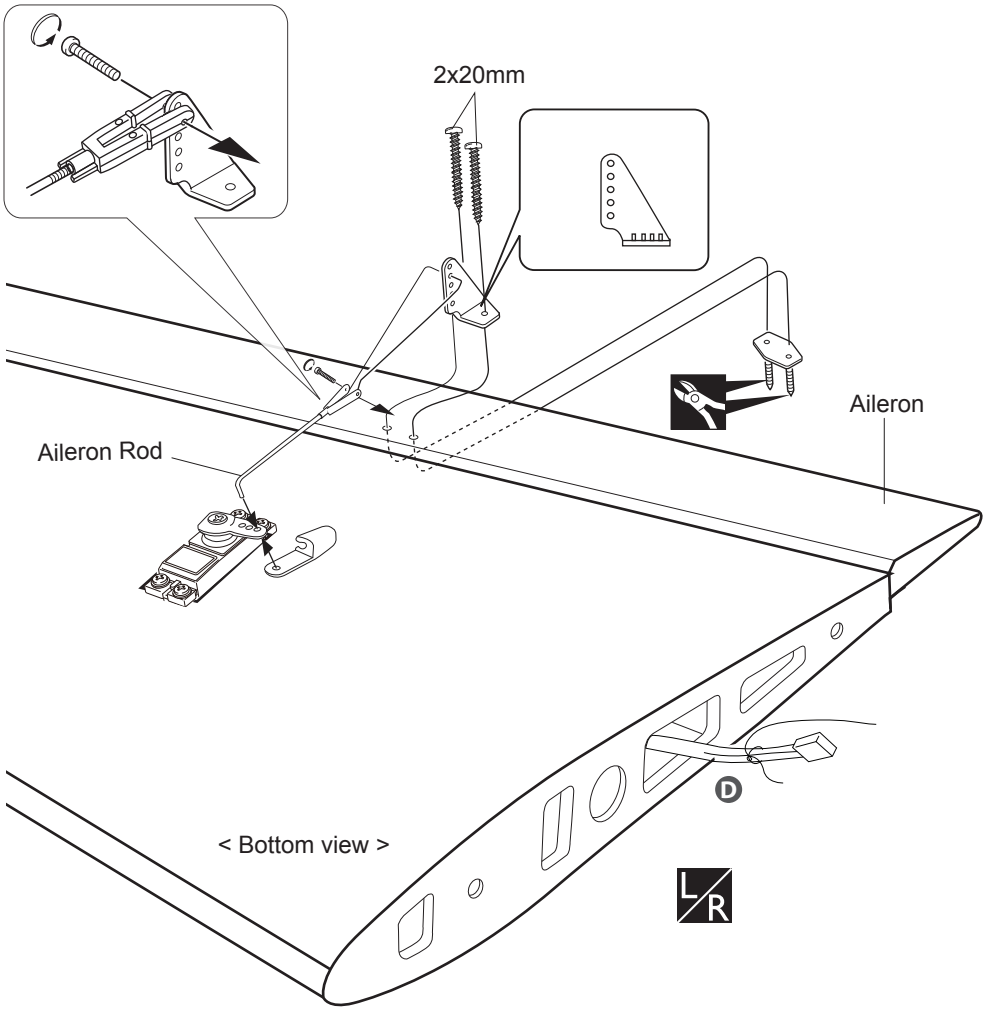

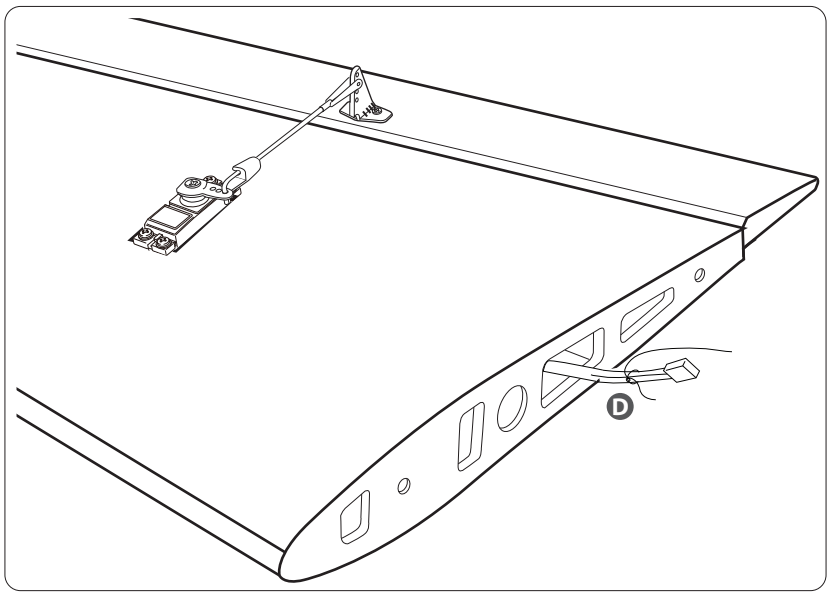

B Mark the spot to attach.

C Bend 90°

D Pull out servo cord with string.

L/R Assemble left and right sides the same way

Cut off excess.

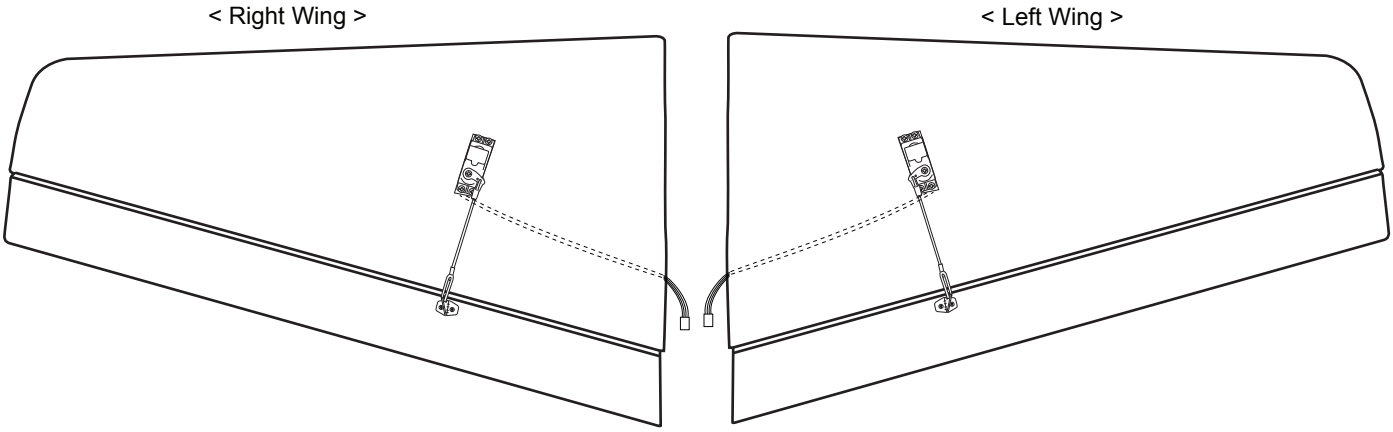

SECURE THE WING TO THE FUSELAGE

Attach the wings to the fuselage and secure the wing panels using 4 plastic screw.

6x65mm Plastic Screw

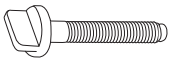

4

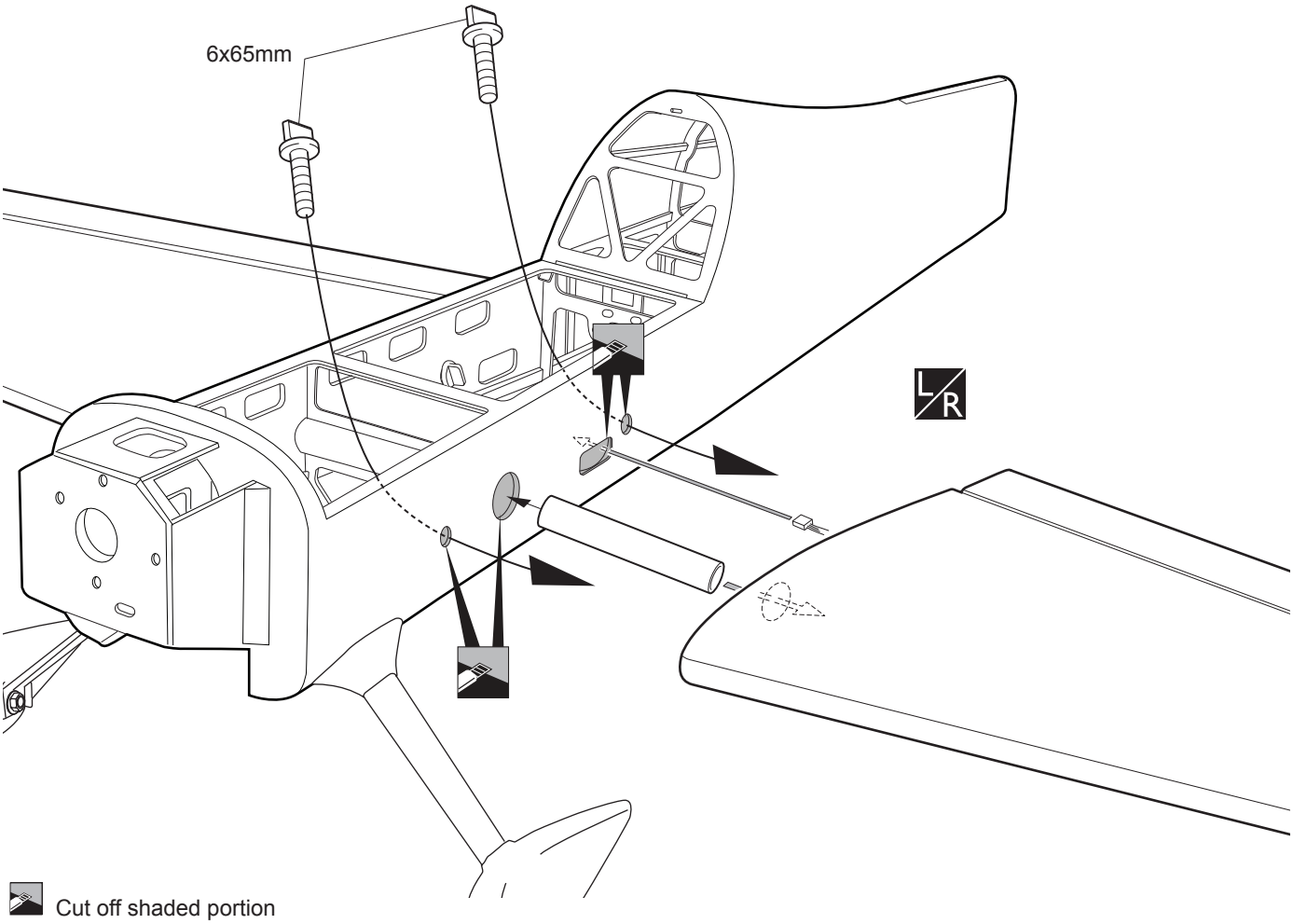

Cut off shaded portion

L/R Assemble left and right sides the same way

HORIZONTAL AND VERTICAL STABILIZER INSTALLATION

1. Using a modeling knife, cut away the covering from the fuselage for the stabilizer and remove it.

2. Draw a center line onto the horizontal stabilizer.

3. Check the fit of the horizontal stabilizer in its slot. Make sure the horizontal stabilizer is square and centered to the fuselage by taking measurements, but don't glue anything yet.

4. With the horizontal stabilizer correctly aligned, mark the shape of the fuselage on the top and bottom of the tail plane using a water soluble / non-permanent felt-tip pen.

5. Remove the stabilizer. Using the lines you just drew as a guide, carefully remove the covering from between them using a modeling knife.

When cutting through the covering to remove it, cut with only enough pressure to only cut through the covering it's self. Cutting into the balsa structure may weaken it. This could lead to possible failure during flight.

6. When you are sure that everything is aligned correctly, mix up a generous amount of 30 minute epoxy. Apply a thin layer to the top and bottom of the stabilizer mounting area and to the stabilizer mounting platform sides in the fuselage. Slide the stabilizer in place and re-align. Double check all of your measurements one more time before the epoxy cures. Remove any excess epoxy using a paper towel and rubbing alcohol and hold the stabilizer in place with T-pins or masking tape.

7. After the epoxy has fully cured, remove the masking tape or T-pins used to hold the stabilizer in place and carefully inspect the glue joints. Use more epoxy to fill in any gaps that were not filled previously and clean up the excess using a paper towel and rubbing alcohol.

8. Installing the elevator using C.A glue as installing the aileron.

Warning!

► Make certain plane is aligned accurately per the diagram. A mis-aligned plane can fly erraticaliy and cause accidents.

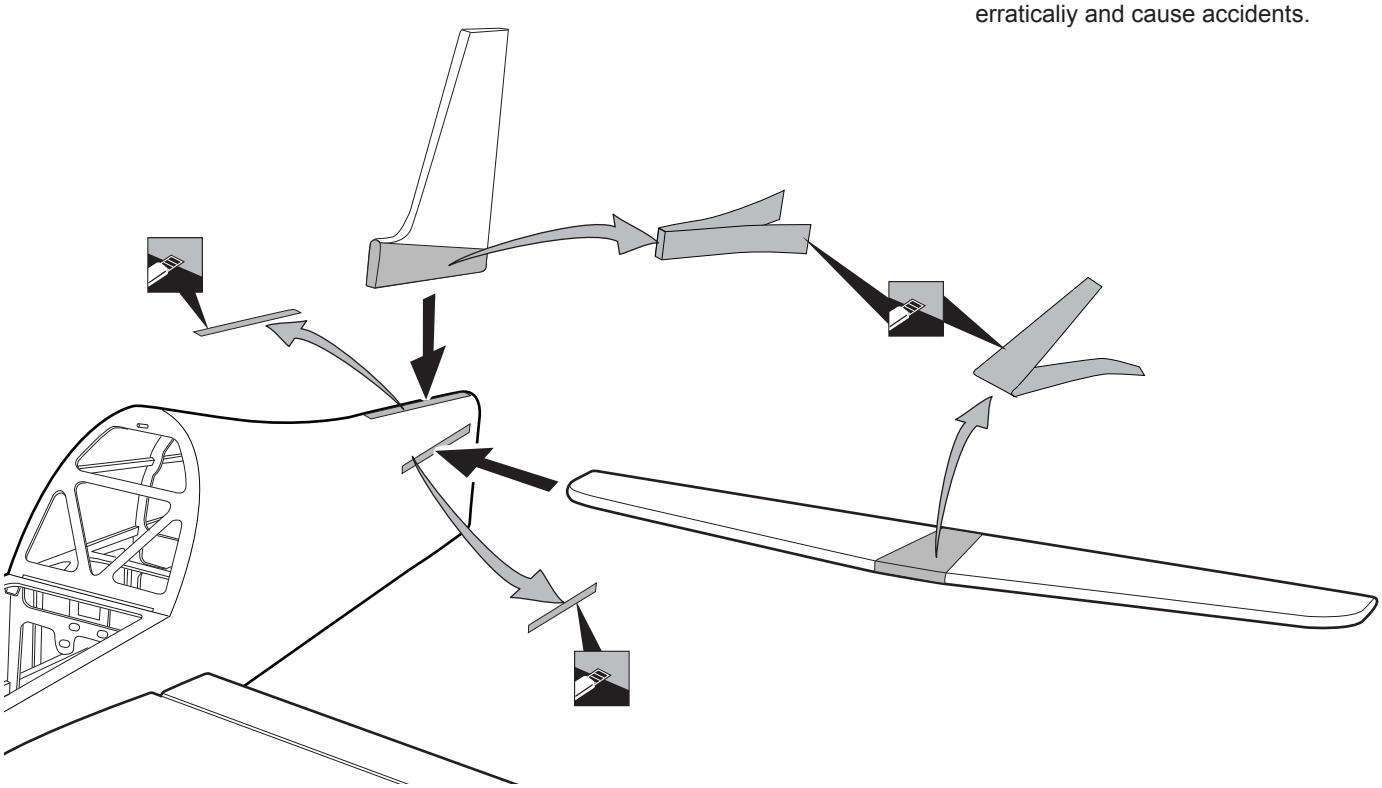

Cut off shaded portion

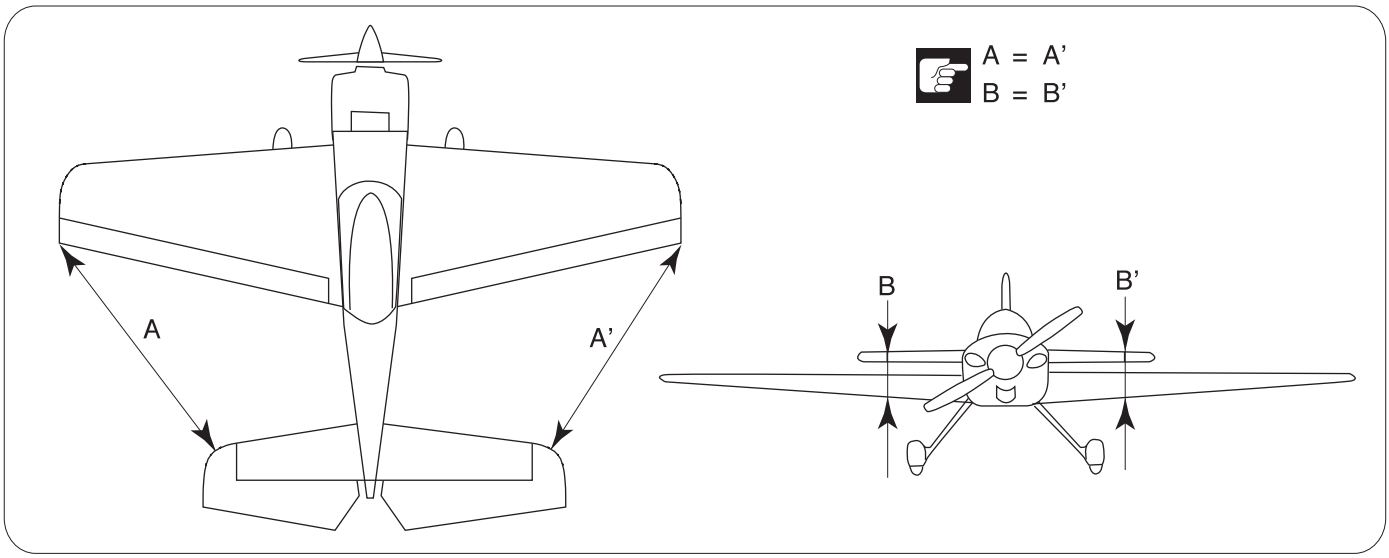

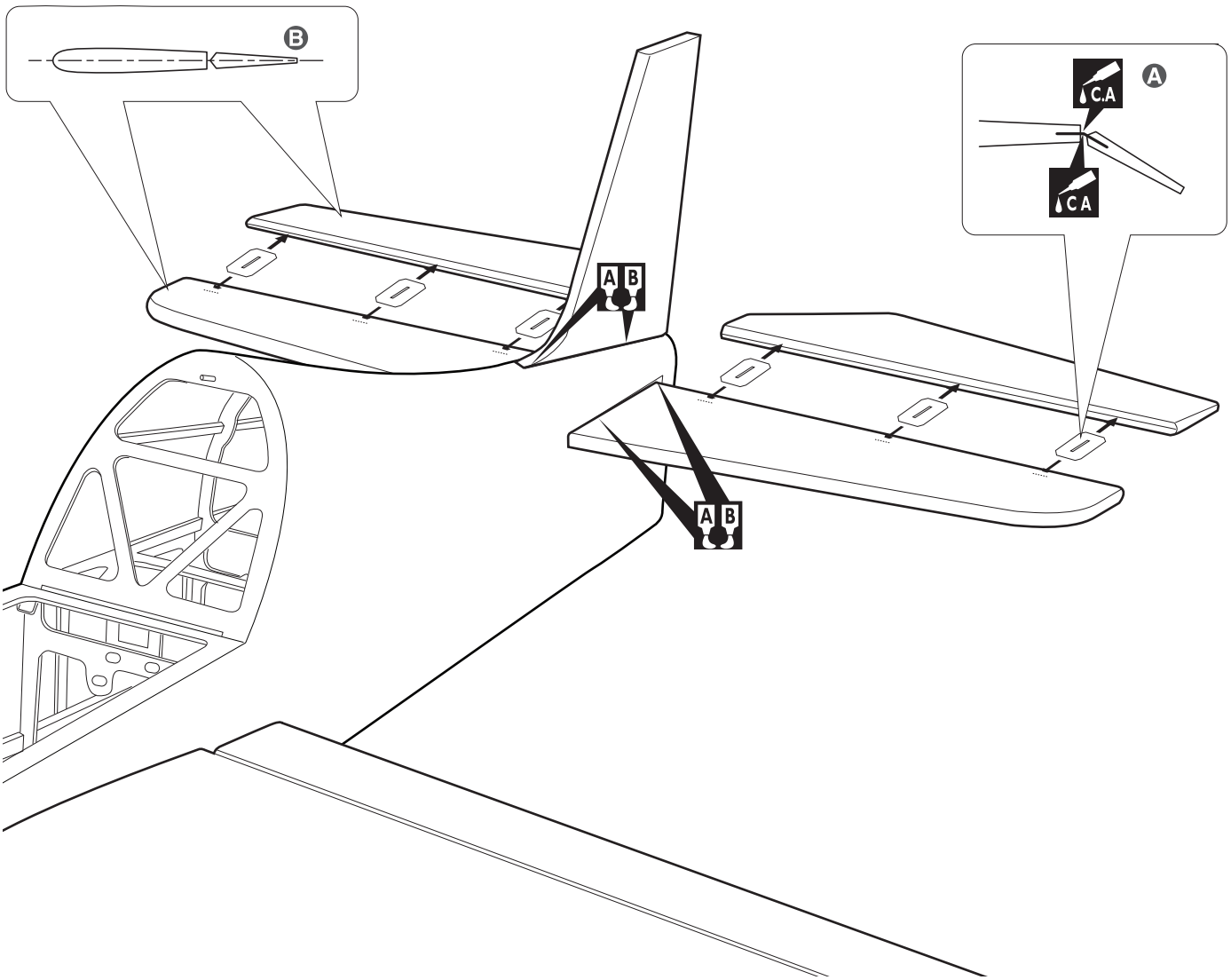

Ⓐ Secure nylon hinges with instant glue, being careful vertical fin and rudder.

Ⓑ Align the center line of vertical fin with rudder.

Apply instant glue (CA glue, super glue).

Apply epoxy glue

INSTALLING RUDDER AND TAIL GEAR

2 x 16mm TP Screw ---------- 2

3 x 12mm TP Screw ---------- 2

3 x 4mm Set Screw ---------- 2

2mm Collar ---------- 3

---------- 2

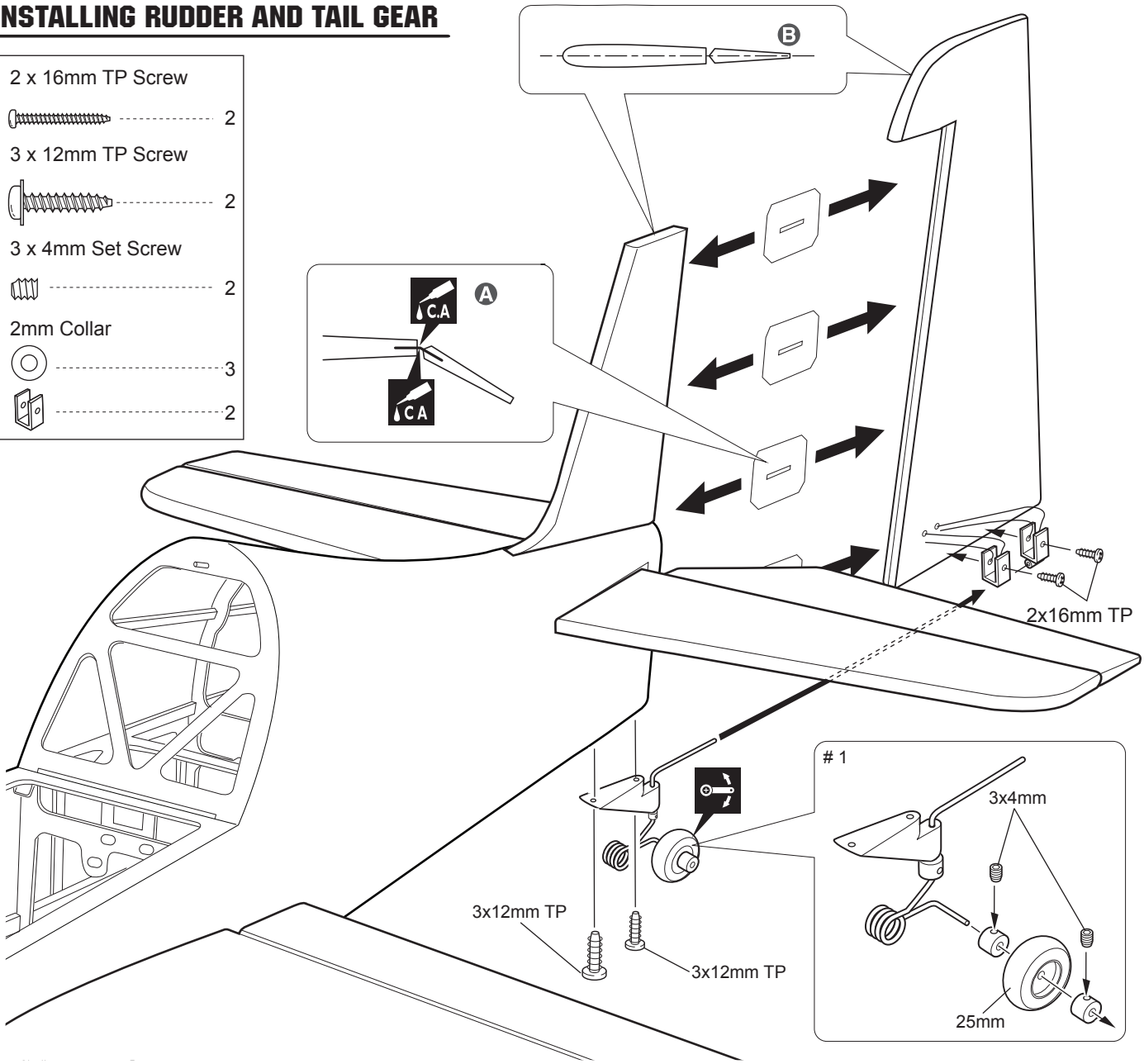

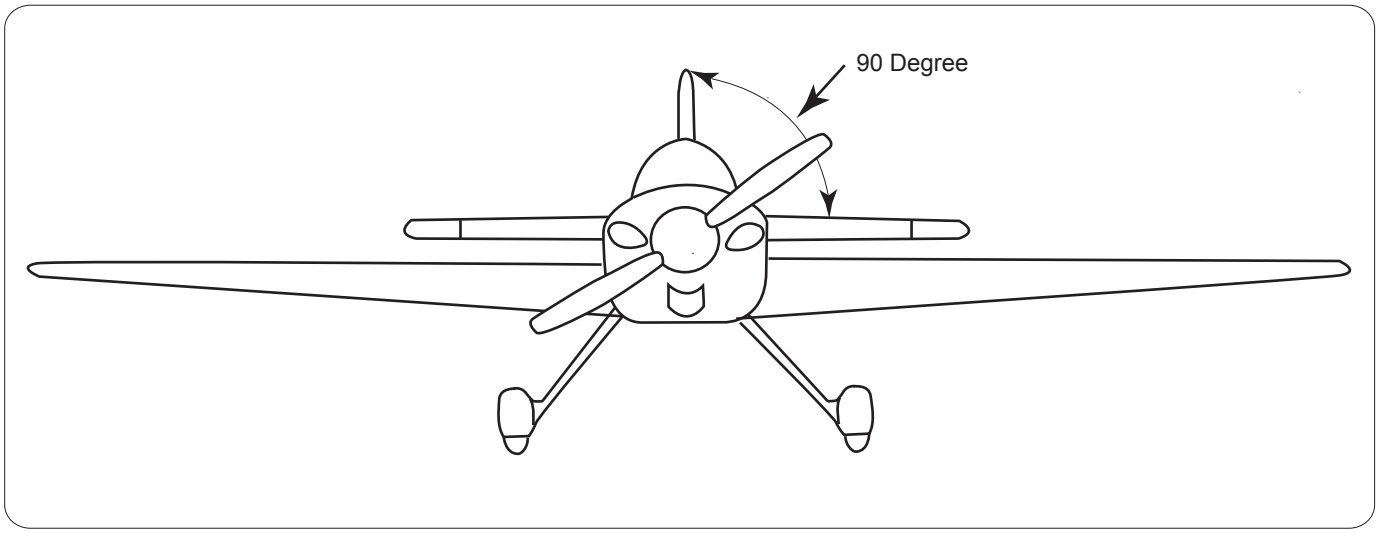

Ⓐ Secure nylon hinges with instant glue, being careful vertical fin and rudder.

Ⓑ Align the center line of vertical fin with rudder.

C.A Apply instant glue (CA glue, super glue).

Ensure smooth, non-binding movement when assembling

INSTALLING THE RUDDER PUSHROD

1. Locate the pushrod exit slot on the right side of the fuselage.
2. Carefully cut away the covering material from the slot.
3. Working from inside the fuselage, slide the threaded end of the remaining pushrod down the inside of the fuselage until the pushrod reaches the exit slot. Carefully reach in with a small screw driver and guide the pushrod out of the exit slot.
4. Install the clevis on the rudder pushrod. Make sure 6mm of thread shows inside the clevis.
5. The control horn should be mounted on the right side of the rudder at the leading edge, in line with the rudder pushrod.
6. Drill two holes through the rudder using the control horn as a guide and screw the control horn in place.
7. Attach clevis to the third hole in the control horn.
8. Locate one nylon servo arm, and using wire cutters, remove all but one of the arms using a 2mm drill bit, enlarge the third hole out from the center to accommodate the rudder pushrod wire.
9. Plug the rudder servo into the receiver and center the servo. Install the servo arm onto the servo.
10. Center the rudder and hold it in place using a piece of masking tape.
11. With the rudder and rudder servo centered, carefully place a mark on the rudder pushrod wire where it crosses the hole in the servo arm.
12. Using a pliers, carefully make a 90 degree bend up at the mark made. Cut off excess wire, leaving about 6mm beyond the bend.
13. Insert the 90 degree bend up through the hole in the servo arm. Install one nylon snap keeper over the wire to secure it to the arm. Install the servo arm retaining screw and remove the masking tape from the rudder.
14. Using thick CA glue, secure the pushrod sleeves to the pushrod sleeve guide.

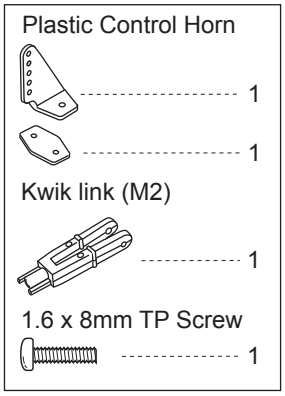

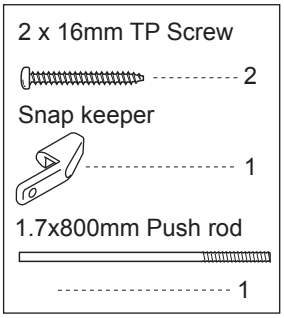

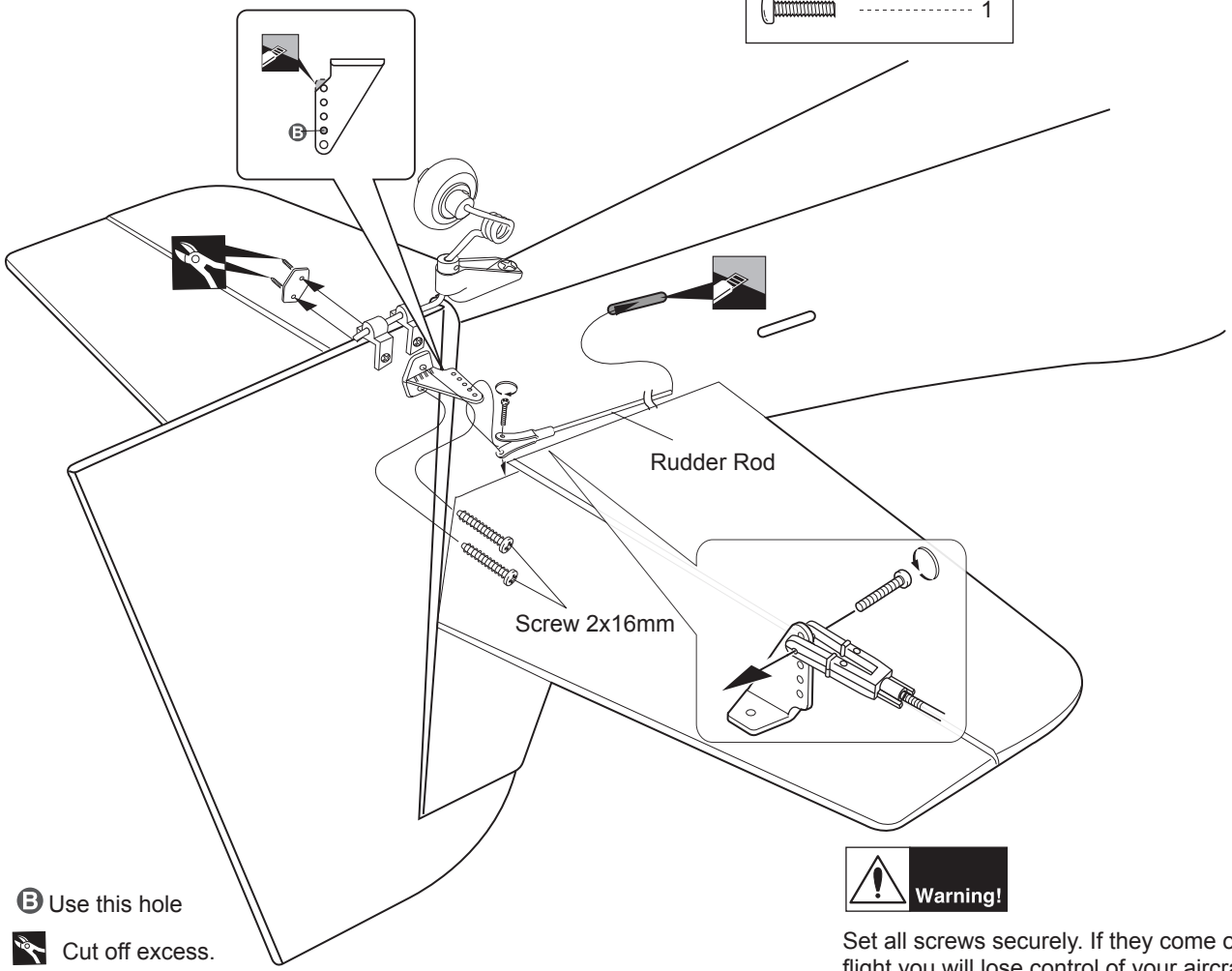

B Use this hole

Cut off excess.

Cut off shaded portion

Warning!

Set all screws securely. If they come off during flight you will lose control of your aircraft!

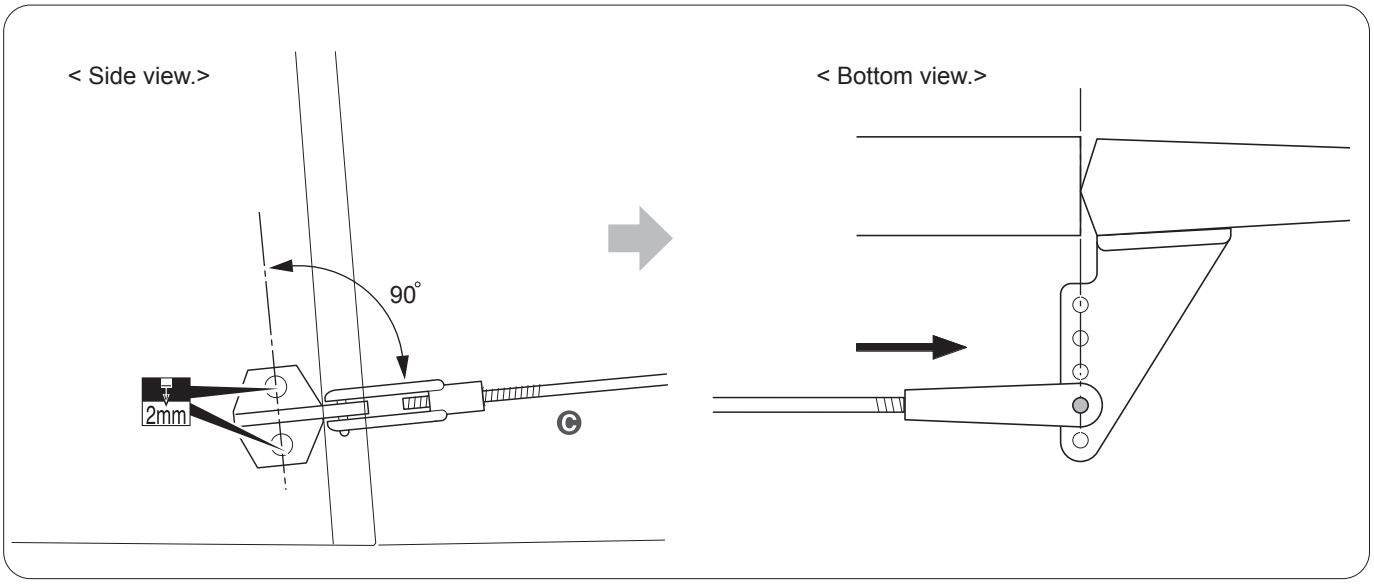

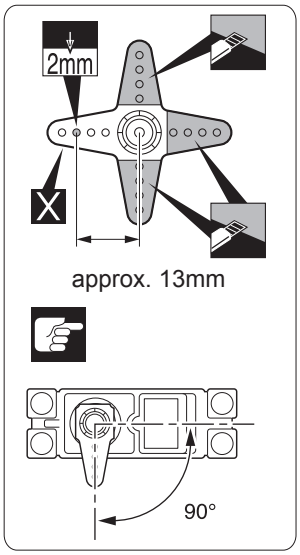

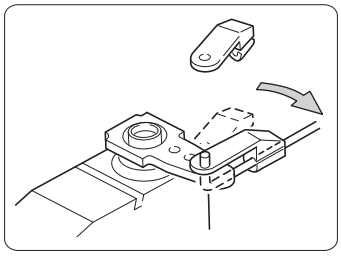

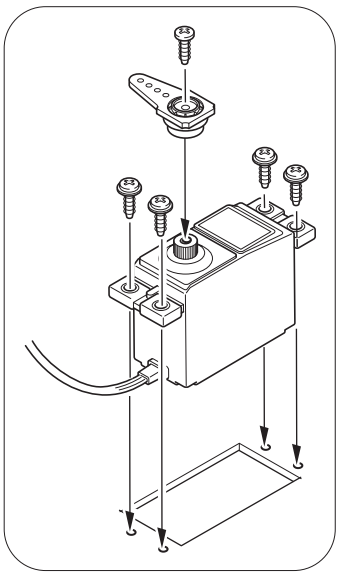

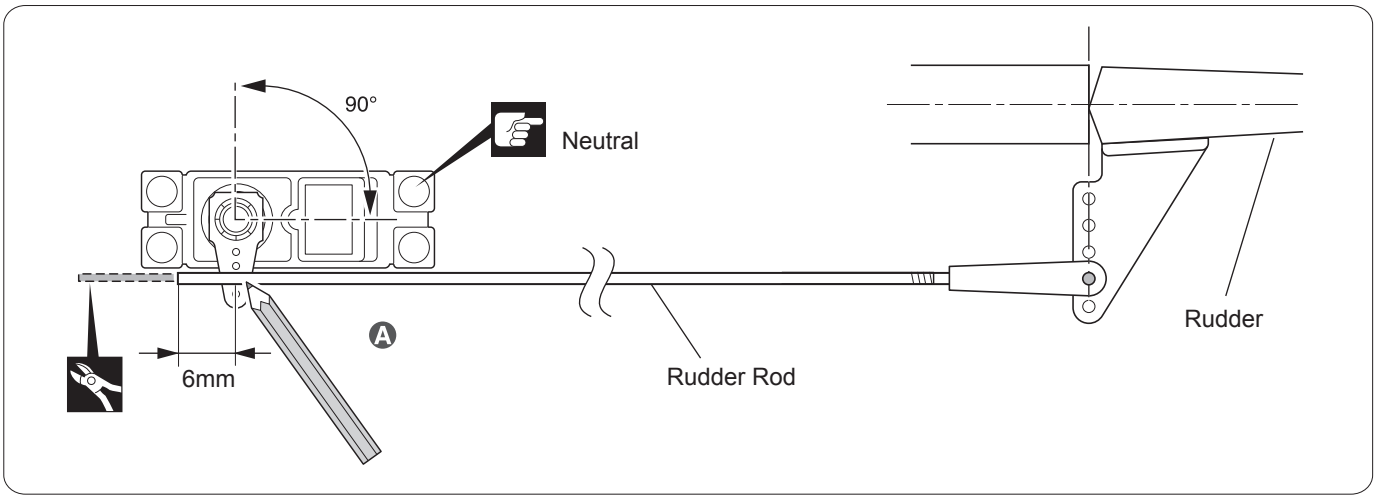

A Mark the spot to attach.

C Install the horn in a position so the rod is straight

X Must be purchased separately!

Cut off excess.

Pay close attention

Cut off shaded portion

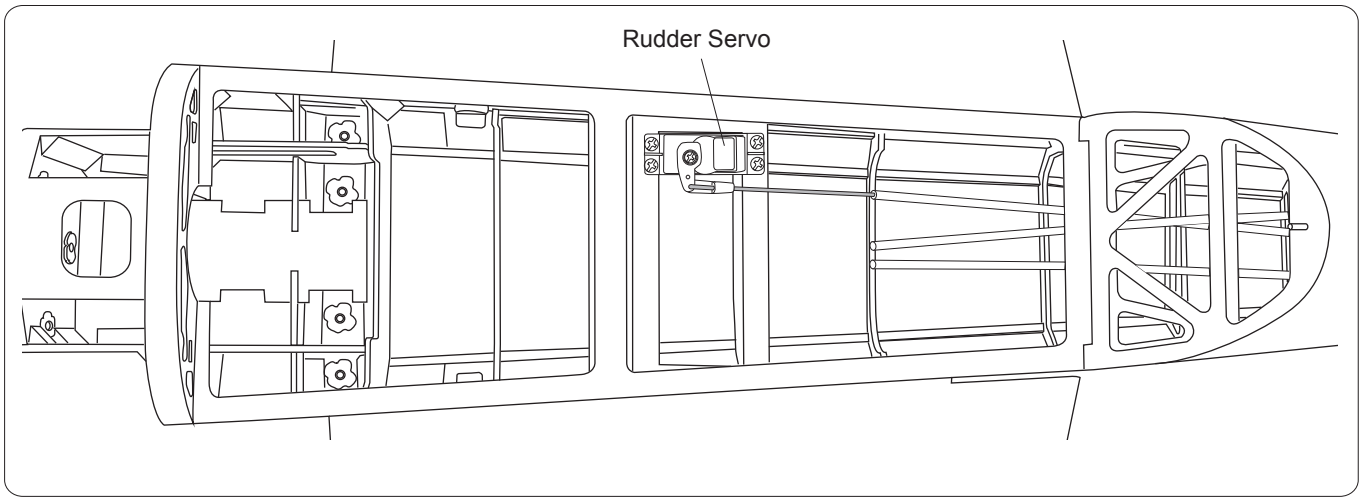

INSTALLING THE ELEVATOR PUSHROD

1. Locate the pushrod exit slot on the right side and left side of the fuselage. It is located slightly ahead and below the horizontal stabilizer.
2. Carefully cut away the covering material from the slot.
3. Working from inside the fuselage, slide the threaded end of the pushrod until it reaches the exit slot. Carefully reach in with a small screw driver and guide the pushrod out of the exit slot.
4. Install the clevis into the two elevator pushrod. Make sure 6mm of thread shows inside the clevis.
5. The control horn should be mounted on the bottom, left side and right side of the elevator at the leading edge, in line with the elevator pushrod.
6. Drill two holes through the elevator using the control horn as a guide and screw the control horn in place.
7. Attach clevis to the third hole in the control horn.
8. Connect the two elevator pushrod using the domino.
9. Locate one nylon servo arm, and using wire cutters, remove all but one of the arms. Using a 2mm drill bit, enlarge the third hole out from the center to accommodate the elevator pushrod wire.
10. Plug the elevator servo into the receiver and center the servo. Install the servo arm onto the servo. The servo arm should be perpendicular to the servo and point toward the middle of the fuselage.
11. Be sure both elevator halves are flat. Center both elevator halves and hold them in place using a couple of pieces of masking tape.
12. With the elevator halves and elevator servo centered, carefully place a mark on the elevator pushrod wire where it crosses the hole in the servo arm.
13. Using pliers, carefully make a 90 degree bend up at the mark made. Cut off the excess wire, leaving about 8mm beyond the bend.
14. Insert the 90 degree bend up through the hole in the servo arm, install one nylon snap keeper over the wire to secure it to the arm. Install the servo arm retaining screw and remove the masking tape the elevator halves.

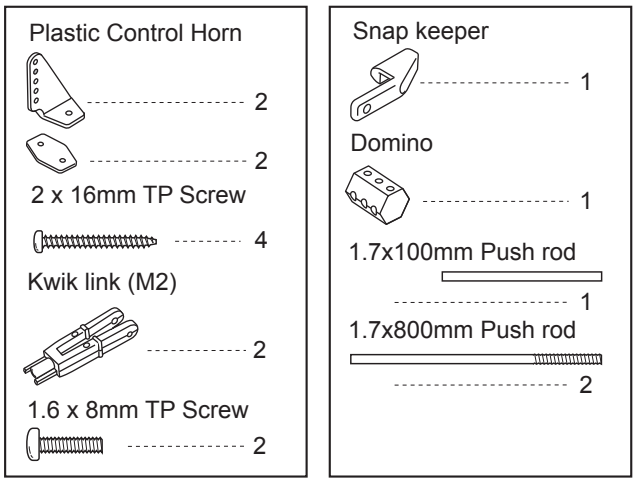

Screw 2x16mm

Rudder Rod

< Right side view.>

< Top view.>

90°

90°

Cut off excess.

Cut off shaded portion

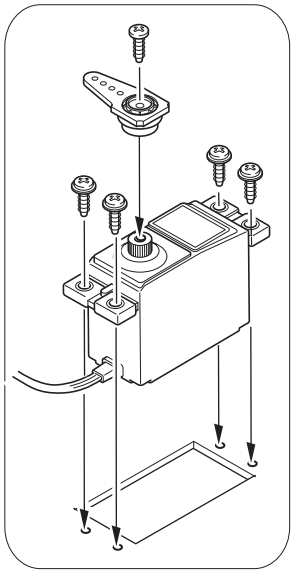

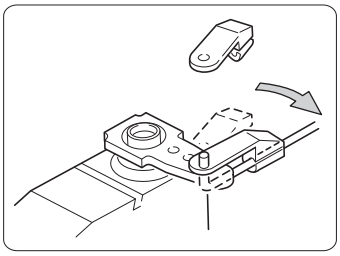

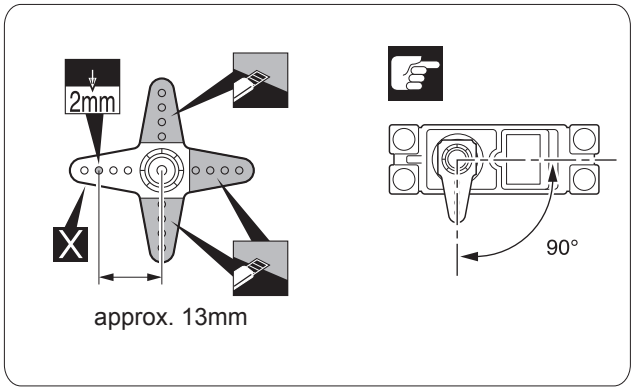

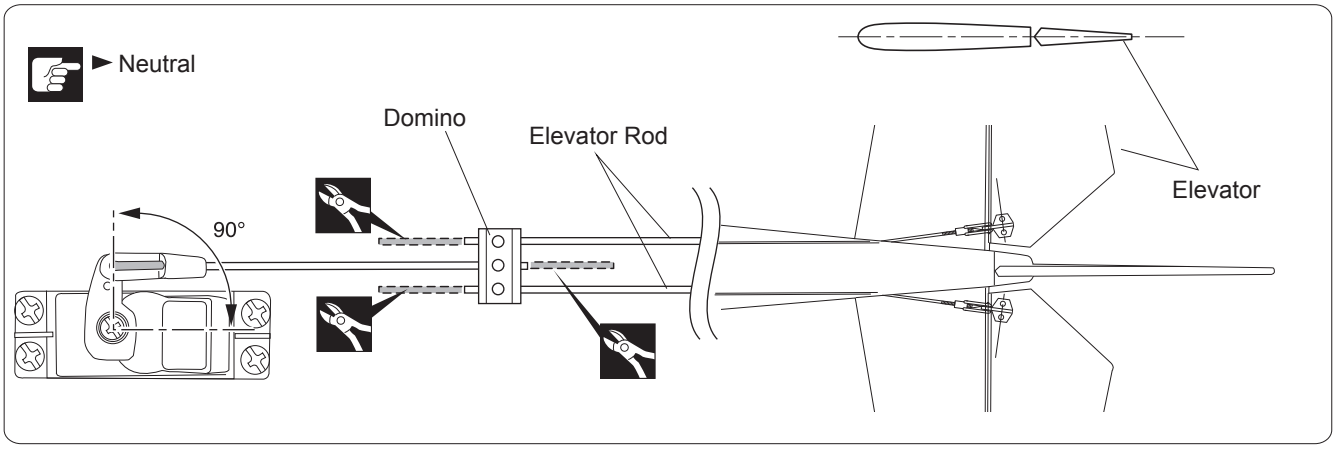

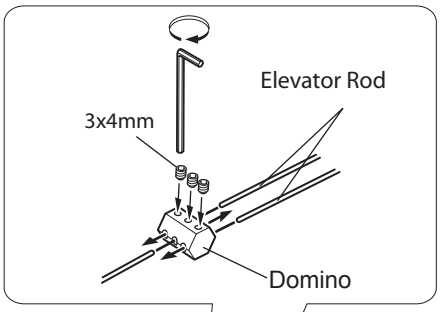

Warning!

Set all screws securely. If they come off during flight you will lose control of your aircraft!

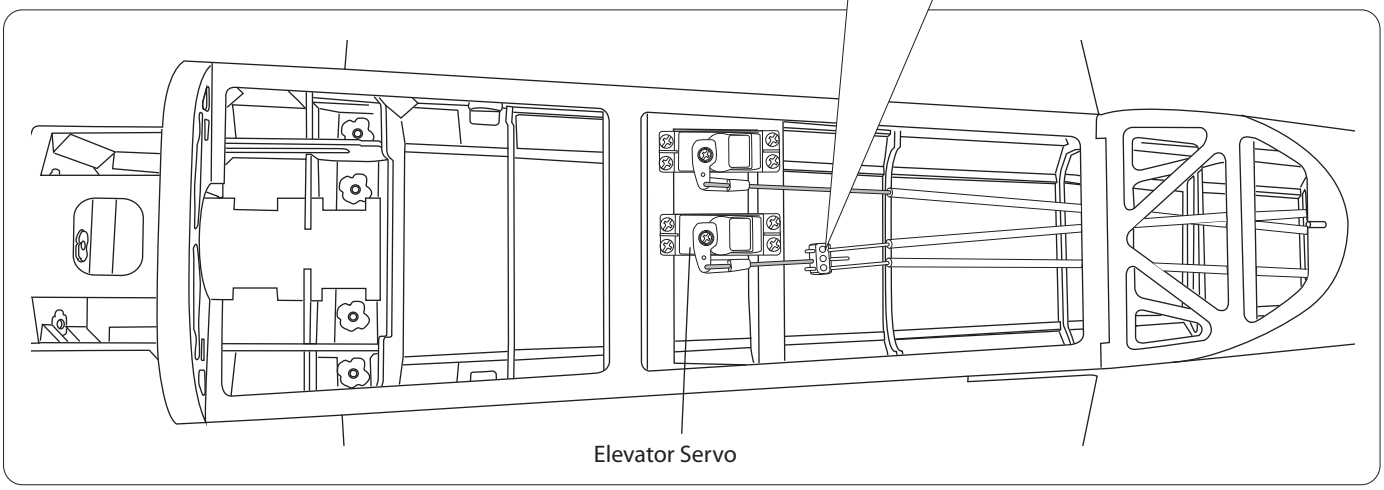

Cut off excess.

Cut off shaded portion

Pay close attention

X Must be purchased separately!

INSTALLING THE ENGINE MOUNT

4 x 25mm Cap Screw -- 4

4mm Washer ---------- 4

4mm Spring Washer ---------- 4

May be you also need to trim some wood from the tri-angle wood for the installation is easy.

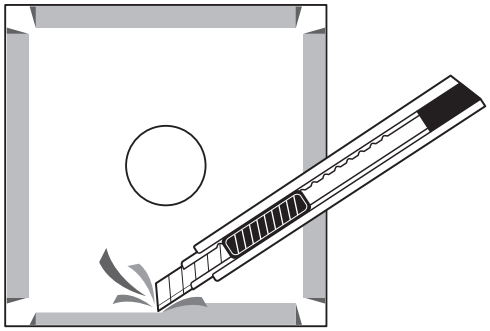

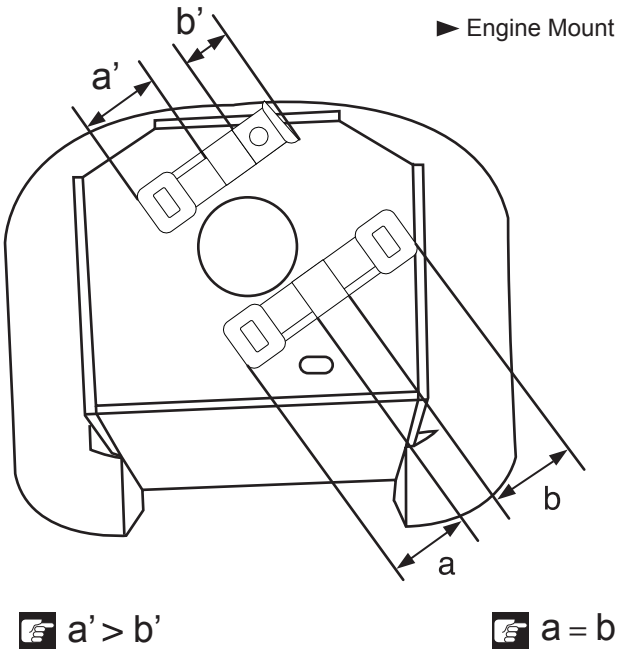

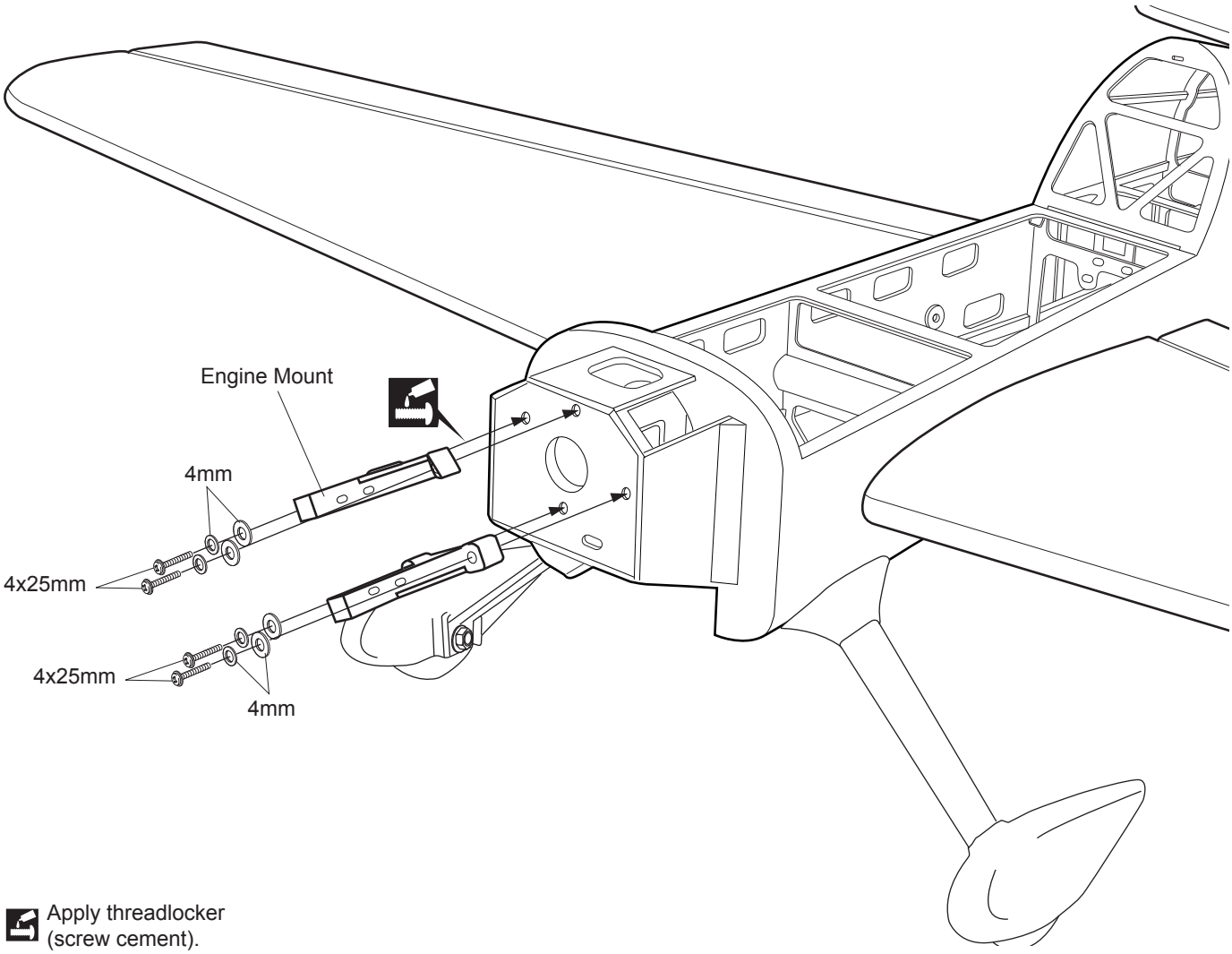

Apply threadlocker (screw cement).

INSTALLING THE FUEL TANK

1. The stopper has been pre-assembled at the factory.

2. Using a modeling knife, cut one length of silicon fuel line (the length of silicon fuel line is calculated by how the weighted clunk should rest about 5mm away from the rear of the tank and move freely inside the tank). Connect one end of the line to the weighted clunk and the other end to the nylon pick up tube in the stopper.

3. Carefully bend the second nylon tube up at a 45 degree angle (using a cigarette lighter). This tube will be the vent tube to the muffler.

4. Carefully bend the third nylon tube down at a 45 degree angle (using a cigarette lighter). This tube will be vent tube to the fueling valve.

⚠ *When the stopper assembly is installed in the tank, the top of the vent tube should rest just below the top surface of the tank. It should not touch the top of the tank.*

5. Test fit the stopper assembly into the tank. It may be necessary to remove some of the flashing around the tank opening using a modeling knife. If flashing is present, make sure none of it falls into the tank.

6. When satisfied with the alignment of the stopper assembly tighten the 3mm x 20mm machine screw until the rubber stopper expands and seals the tank opening. Do not over tighten the assembly as this could cause the tank to split.

7. Using a modeling knife, cut 3 lengths of fuel line . Connect 2 lines to the 2 vent tubes and 1 line to the fuel pickup tube in the stopper.

8. Feed three lines through the fuel tank compartment and through the pre-drilled hole in the firewall. Pull the lines out from behind the engine, while guiding the fuel tank into place. Push the fuel tank as far forward as possible, the front of the tank should just about touch the back of the firewall.

   Blow through one of the lines to ensure the fuel lines have not become kinked inside the fuel tank compartment. Air should flow through easily.

⚠ *Do not secure the tank into place permanently until after balancing the airplane. You may need to remove the tank to mount the battery in the fuel tank compartment.*

9. Secure the fuel tank.

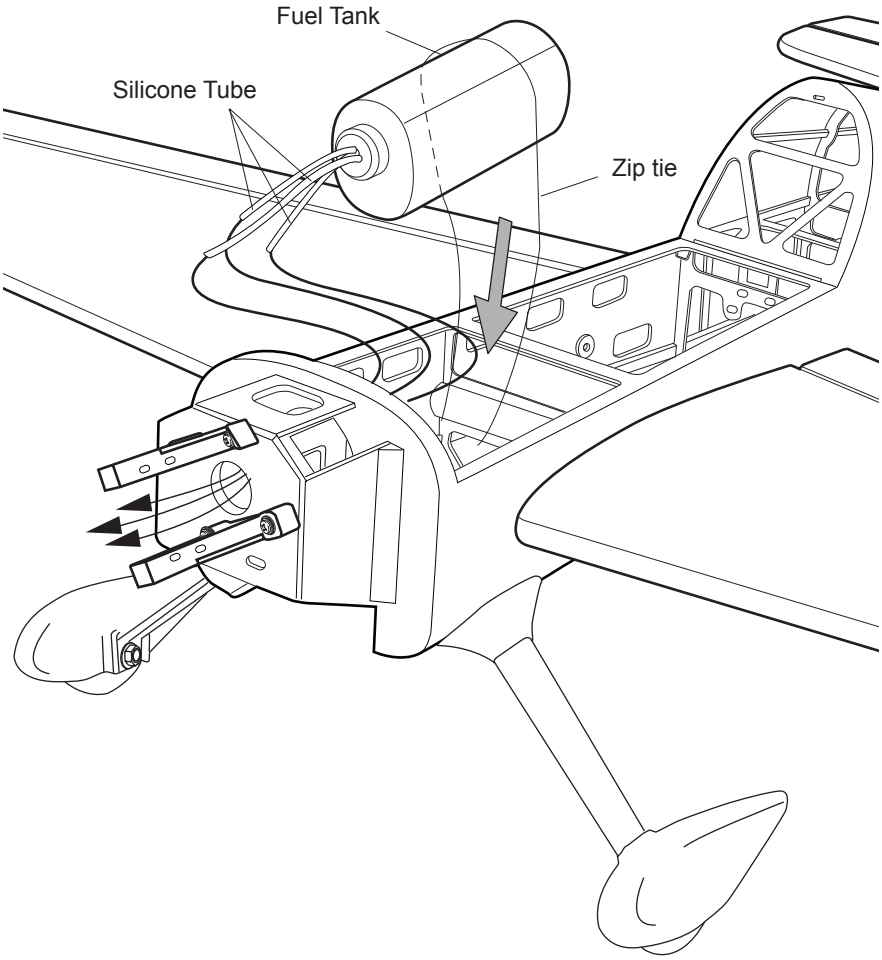

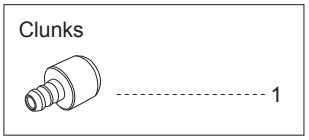

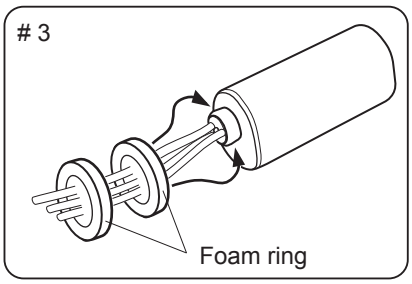

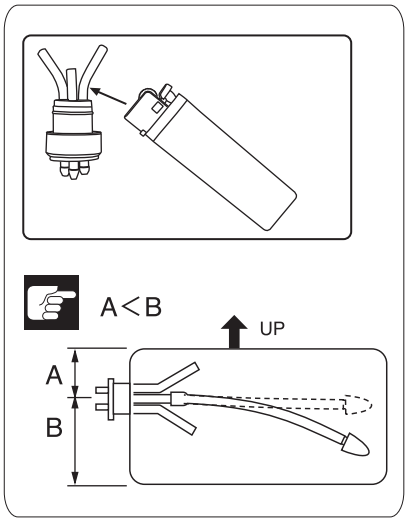

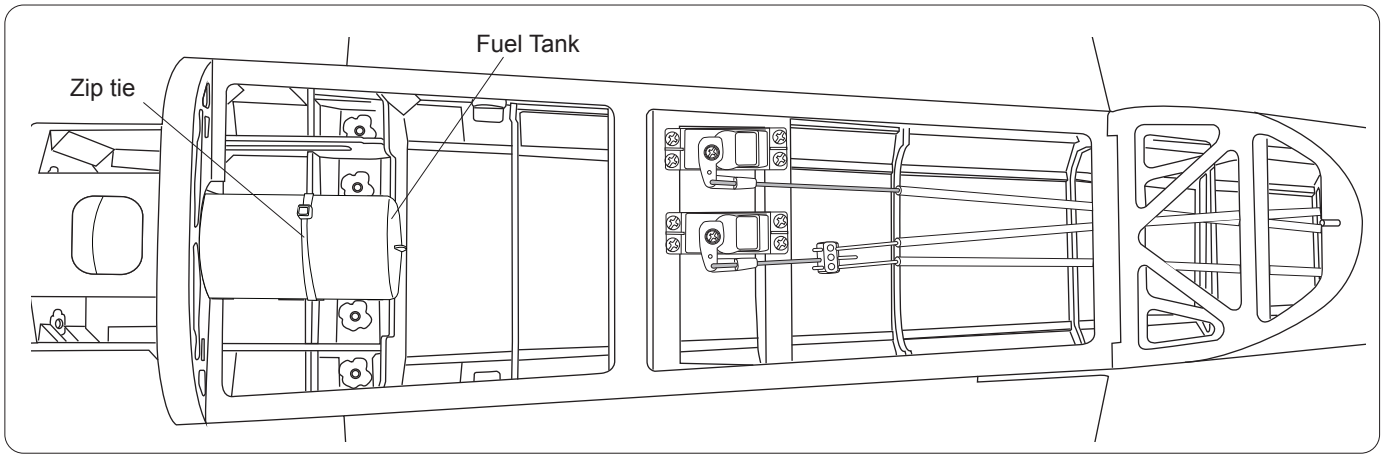

INSTALLING THE THROTTLE PUSHROD SERVO

1. Place the engine into the engine mount and align it properly with the front of the cowling.

⚠ *If your engine is equipped with a remote needle valve, we suggest installing it into the engine at this time.*

2. Slide the pushrod housing through the hole in the firewall, through the hole in the forward bulkhead, and into the servo compartment.

3. Apply epoxy glue to the pushrod housing where it exits the firewall and where it passes through the forward bulkhead. This will secure the housing in place.

4. Using a modeling knife, cut off the nylon pushrod housing 26mm in front of the servo tray.

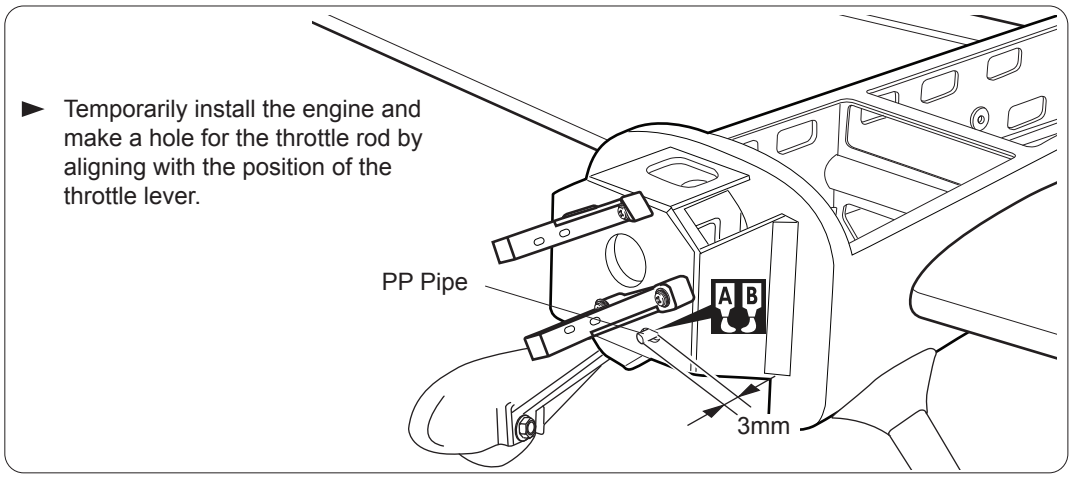

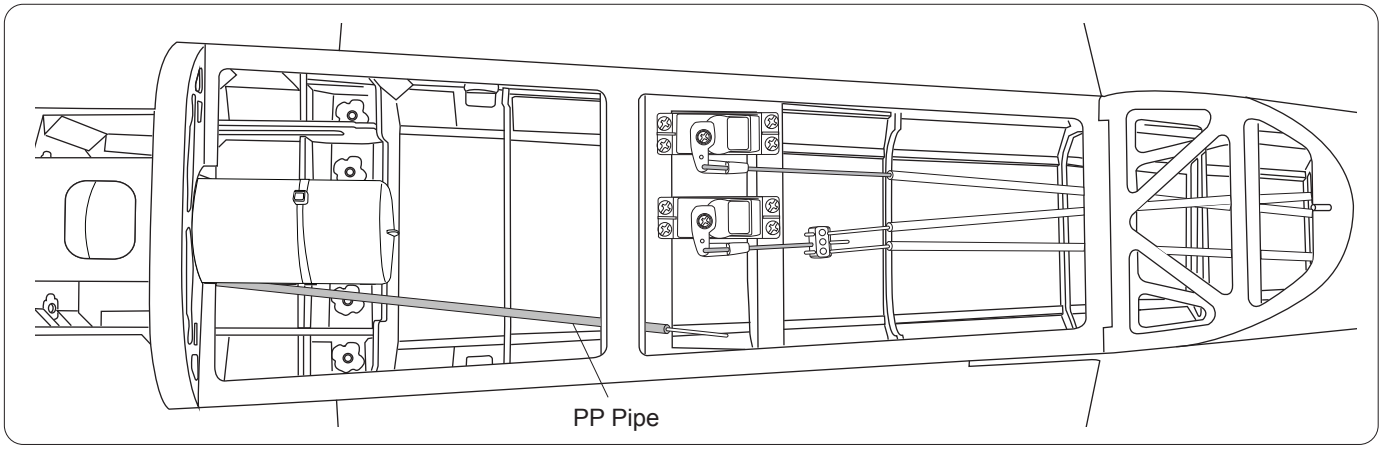

A B Apply epoxy glue

INSTALLING THE ENGINE

Locate the long piece of wire used for the throttle pushrod. One end of the wire has been pre-bend in to a "Z" bend at the factory. This "Z" bend should be inserted into the throttle arm of the engine when the engine is fitted onto the engine mount. Fit the engine to the engine mount using the screws provided.

1.2x500mm Throttle rod	1
350mm PP Pipe	1

3 x 25mm Cap Screw	4
3mm Nylon Nut	4
3mm Washer	4

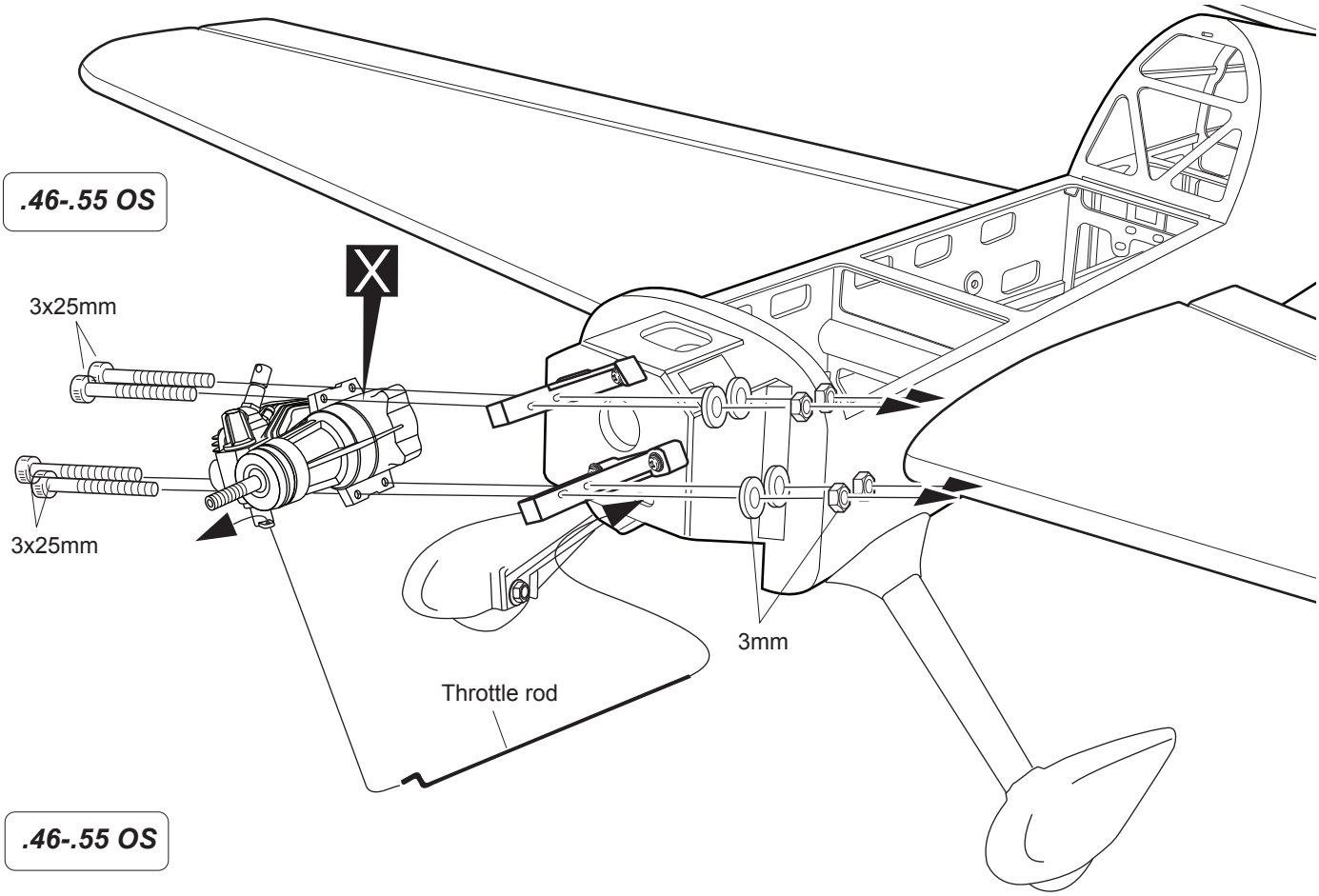

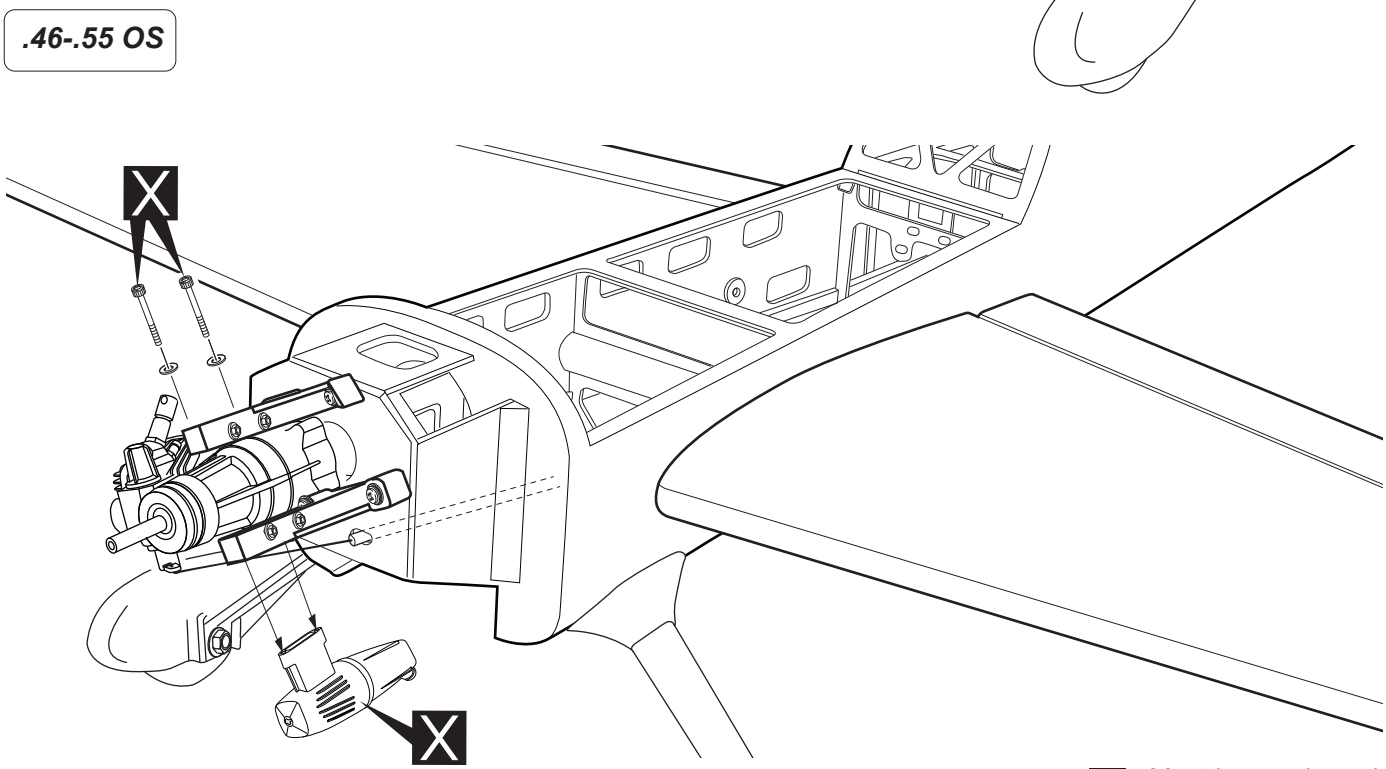

X Must be purchased separately!

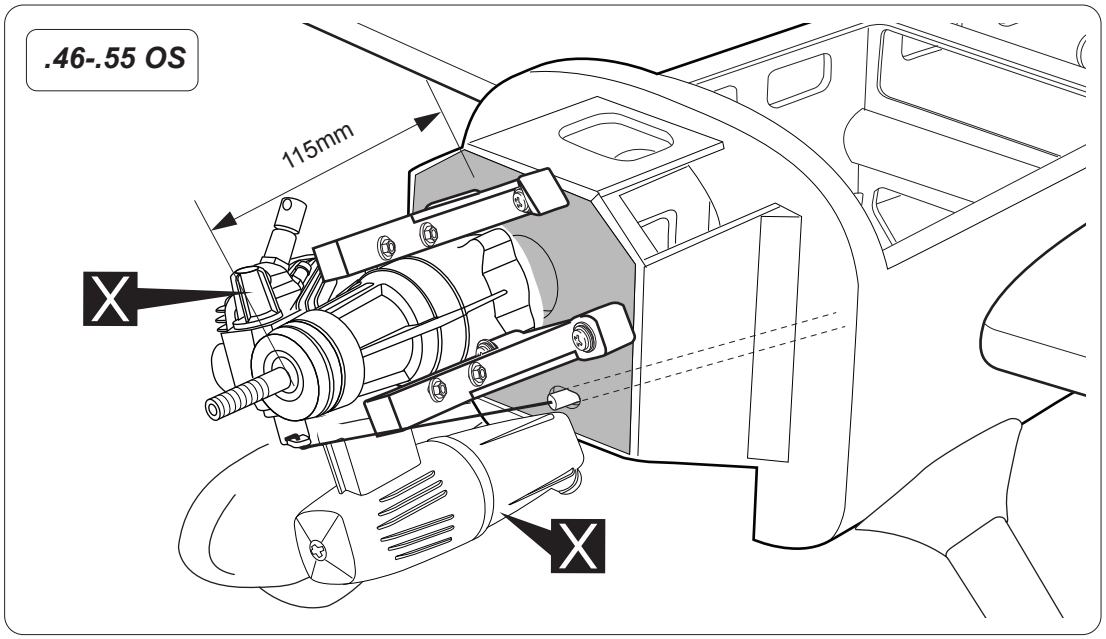

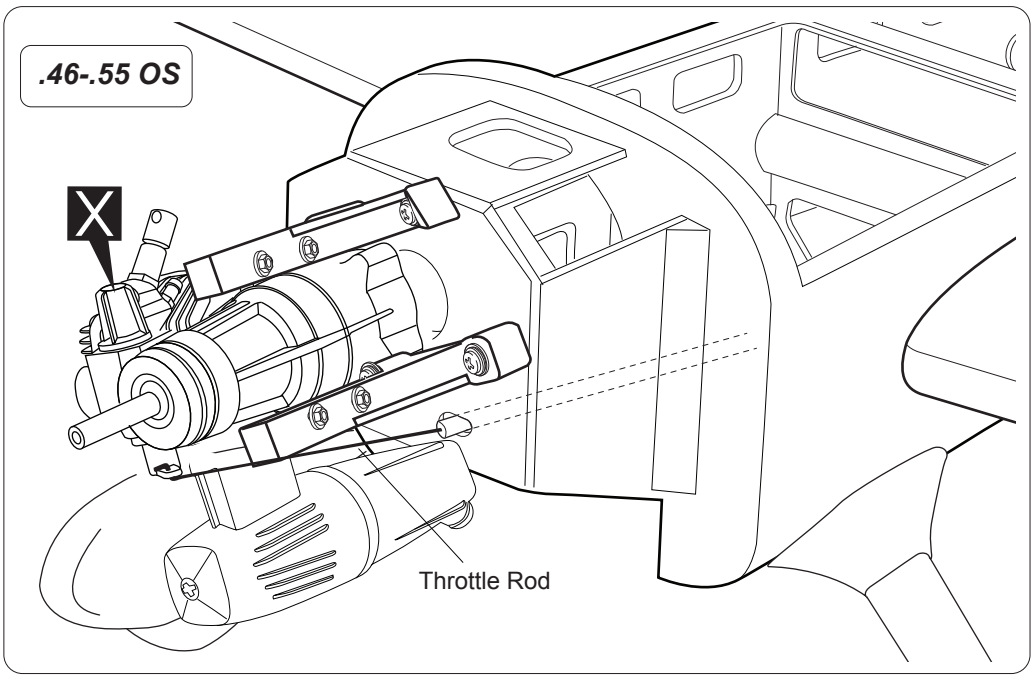

X Must be purchased separately!

INSTALLING THE THROTTLE

1. Install one adjustable metal connector through the third hole out from the center of one servo arm, enlarge the hole in the servo arm using a 2mm drill bit to accommodate the servo connector. Remove the excess material from the arm.

   ⚠ *After installing the adjustable metal connector apply a small drop of thin C/A to the bottom nut. This will prevent the connector from loosening during flight.*

2. Plug the throttle servo into the receiver and turn on the radio system. Check to ensure that the throttle servo output shaft is moving in the correct direction. When the throttle stick is moved forward from idle to full throttle, the throttle barrel should also open and close using this motion. If not, reverse the direction of the servo, using the transmitter.

3. Slide the adjustable metal connector / servo arm assembly over the plain end of the pushrod wire. Position the throttle stick and the throttle trim at their lowest positions.

4. Manually push the carburator barrel fully closed. Angle the arm back about 45 degree from center and attach the servo arm onto the servo. With the carburator barrel fully closed, tighte the set screw in the adjustable metal connector.

5. Remove the excess throttle pushrod wire using wire cutters and install the servo arm retaining screw.

Metal connector

---------- 1

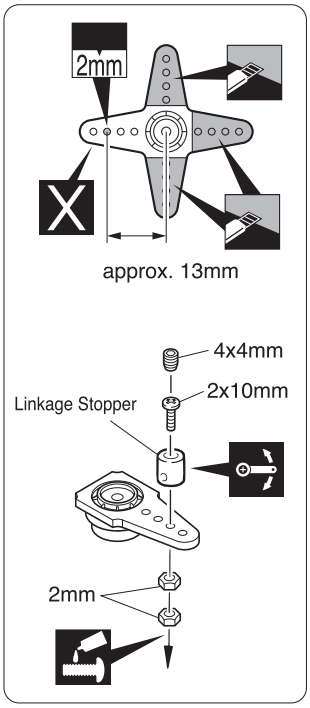

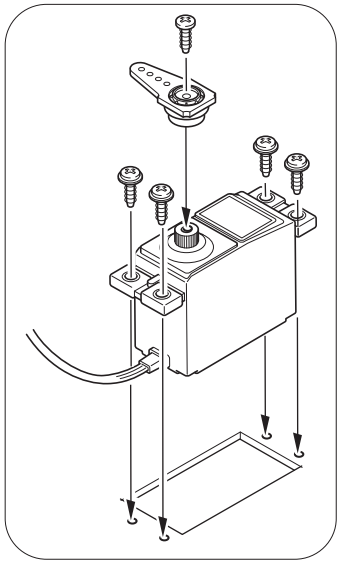

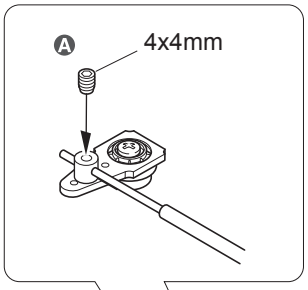

A Adjust the throttle input (transmitter throttle stick), throttle trim movement and the carburattor opening to the suitable position and screw in the 4x4mm set screw.

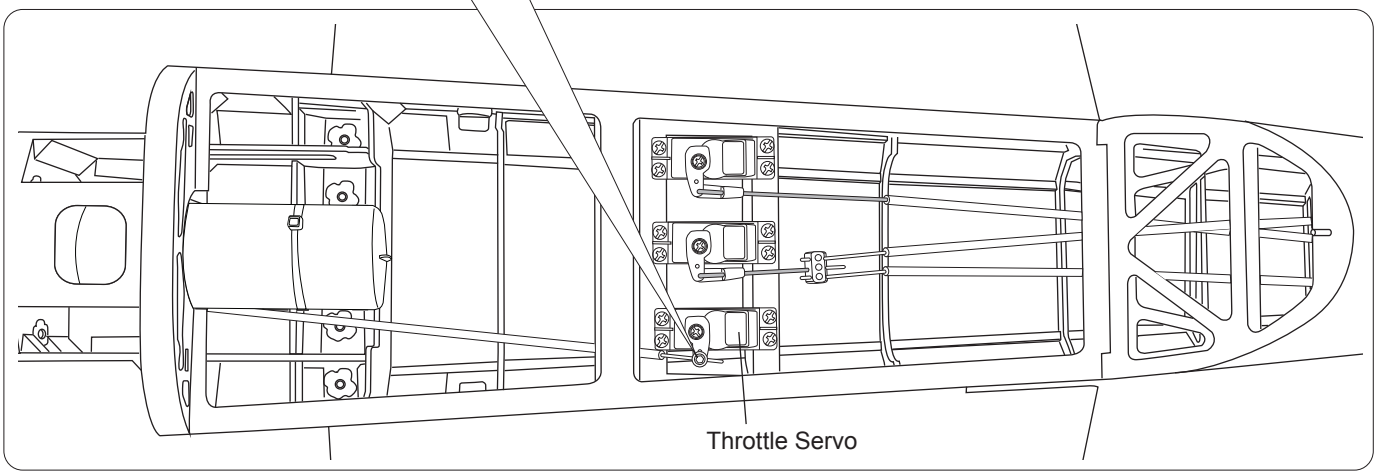

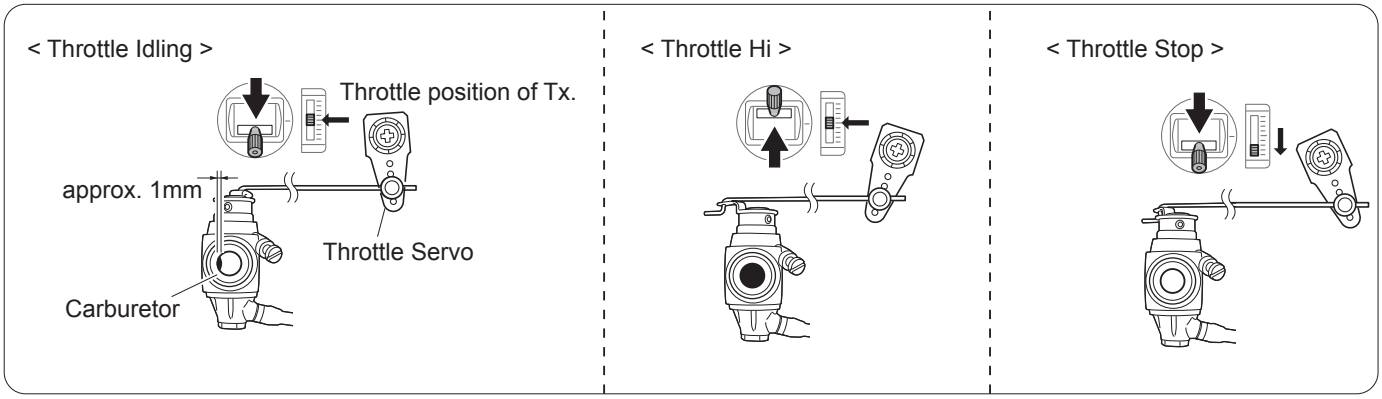

Ensure smooth, non-binding movement when assembling

Cut off shaded portion

Must be purchased separately!

Apply threadlocker (screw cement).

MOUNTING THE COWL

1. Remove the muffler and needle valve assembly from the engine. Slide the fiberglass cowl over the engine.
2. Measure and mark the locations to be cut out for engine head clearance, needle valve, muffler. Remove the cowl and make these cutouts using a rotary tool with a cutting disc and a rotary sanding drum attachment.
3. Slide the cowl back into place. Align the front of the cowl with the crankshaft of the engine. The front of the cowl should be positioned so the crankshaft is in the middle of the precut opening. Hold the cowl firmly in place using several pieces of masking tape.
4. While holding the cowl firmly in position, drill four 1,6mm pilot holes through both the cowl and the side edges of the firewall.
5. Using a 3mm drill bit, enlarge the holes in the cowling.

⚠ *Enlarging the holes through the cowl will prevent the fiberglass from splitting when the mounting screws are installed.*

6. Slide the cowl back over the engine and secure it in place using screws.
7. Install the muffler. Connect the fuel and pressure lines to the carburator, muffler and fuel filler valve. Tighten the screws completely.

3 x 10mm TP Screw ---------- 4

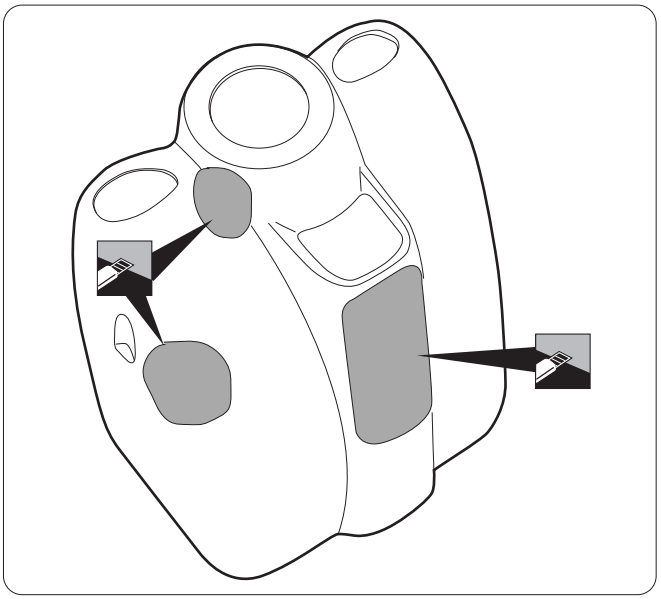

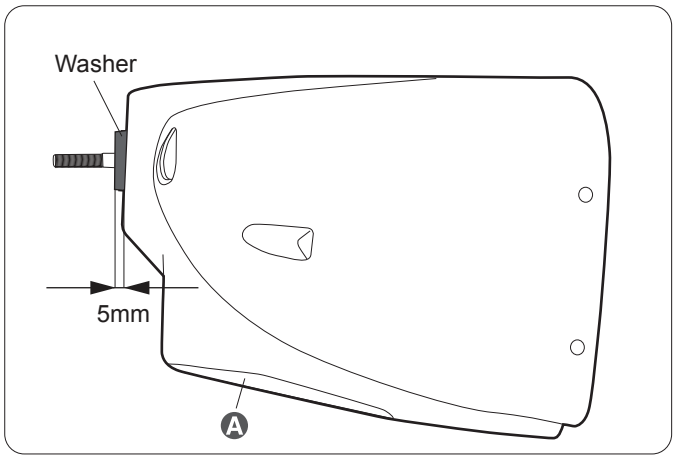

A Trim the cowling so it will match your engine

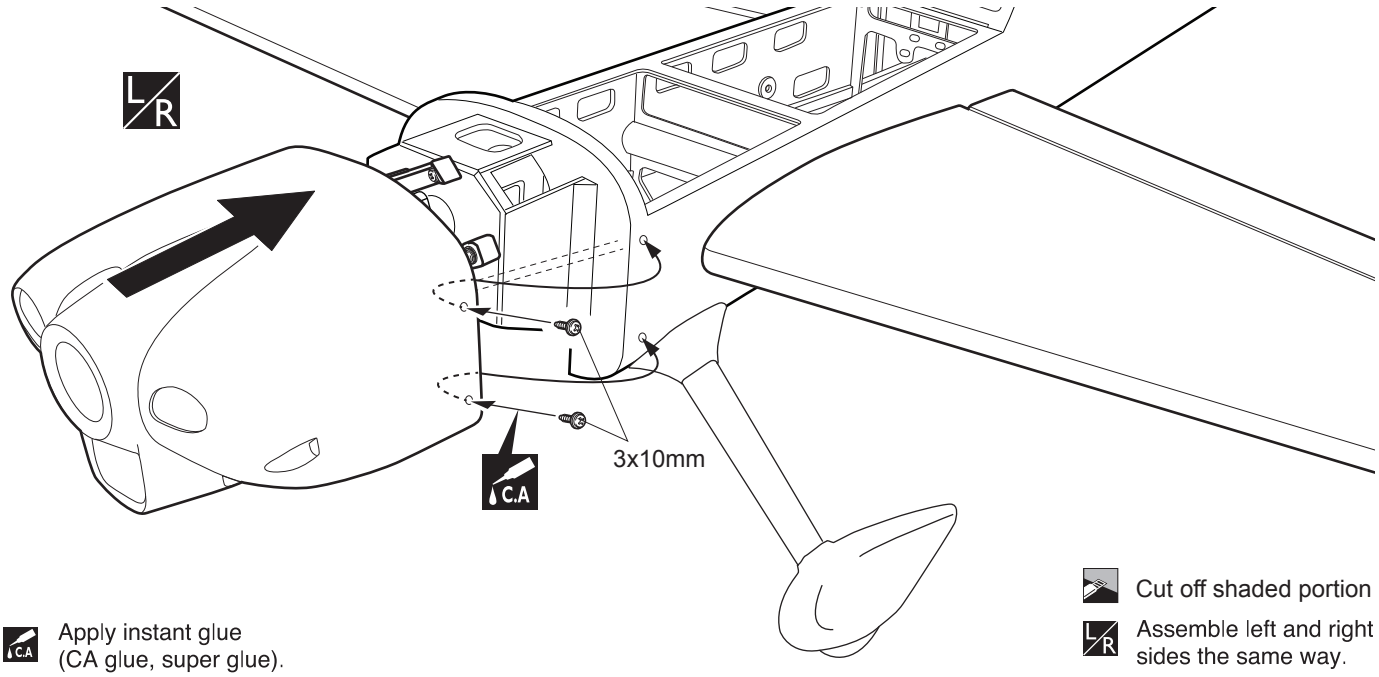

Cut off shaded portion

Assemble left and right sides the same way.

Apply instant glue (CA glue, super glue).

INSTALLING THE SPINNER

Install the spinner back-plate, propeller and spinner cone.

The propeller should not touch any part of the spinner cone. If it dose, use a sharp modeling knife and carefully trim away the spinner cone where the propeller comes in contact with it.

Warning!

- Securely tighten the nut holding the propeller for it not come off when the motor is spinning. If coming off, there is a high risk of injury!
- Always ensure propeller and spinner are balanced.If unbalanced, vibration may result at high rotation and cause damage or injury.

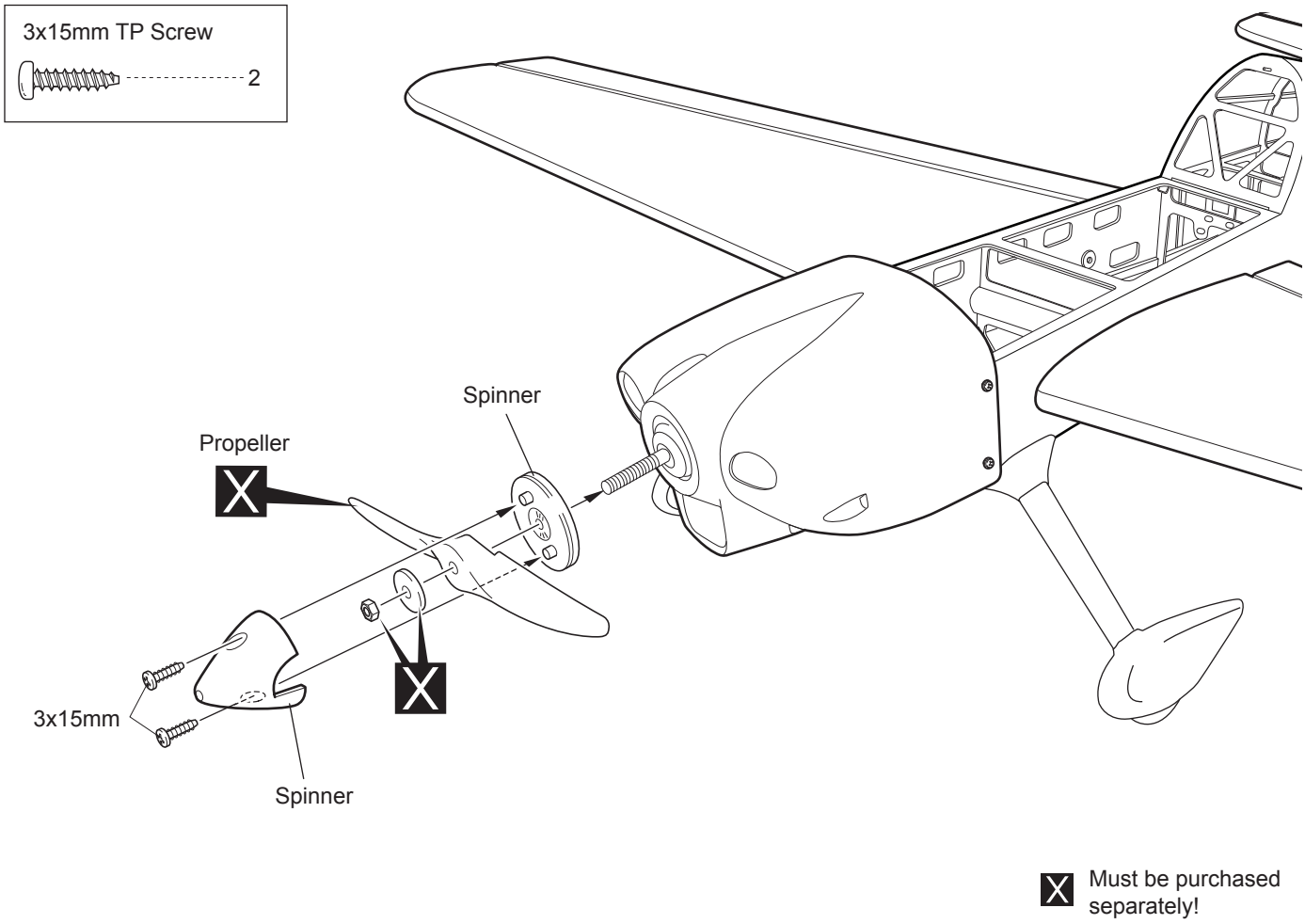

INSTALLING THE RECEIVER AND BATTERY

1. Plug the servo leads and the switch lead into the receiver. You may want to plug an aileron extension into the receiver to make plugging in the aileron servo lead easier when you are installing the wing. Plug the battery pack lead into the switch.
2. Wrap the receiver and battery pack in the protective foam to protect them from vibration. Use a rubber band or masking tape to hold the foam in place.

Do not permanently secure the receiver and battery until after balancing the model.

INSTALLING THE SWITCH

1. The switch should be mounted on the fuselage side, opposite the muffler, close enough to the receiver so the lead will reach. Use the face plate of the switch cut out and locate the mounting holes.
2. Cut out the switch hole using a modeling knife. Use a 2mm drill bit and drill out the two mounting holes through the fuselage side.
3. Secure the switch in place using the two machine screws provided with the radio system.

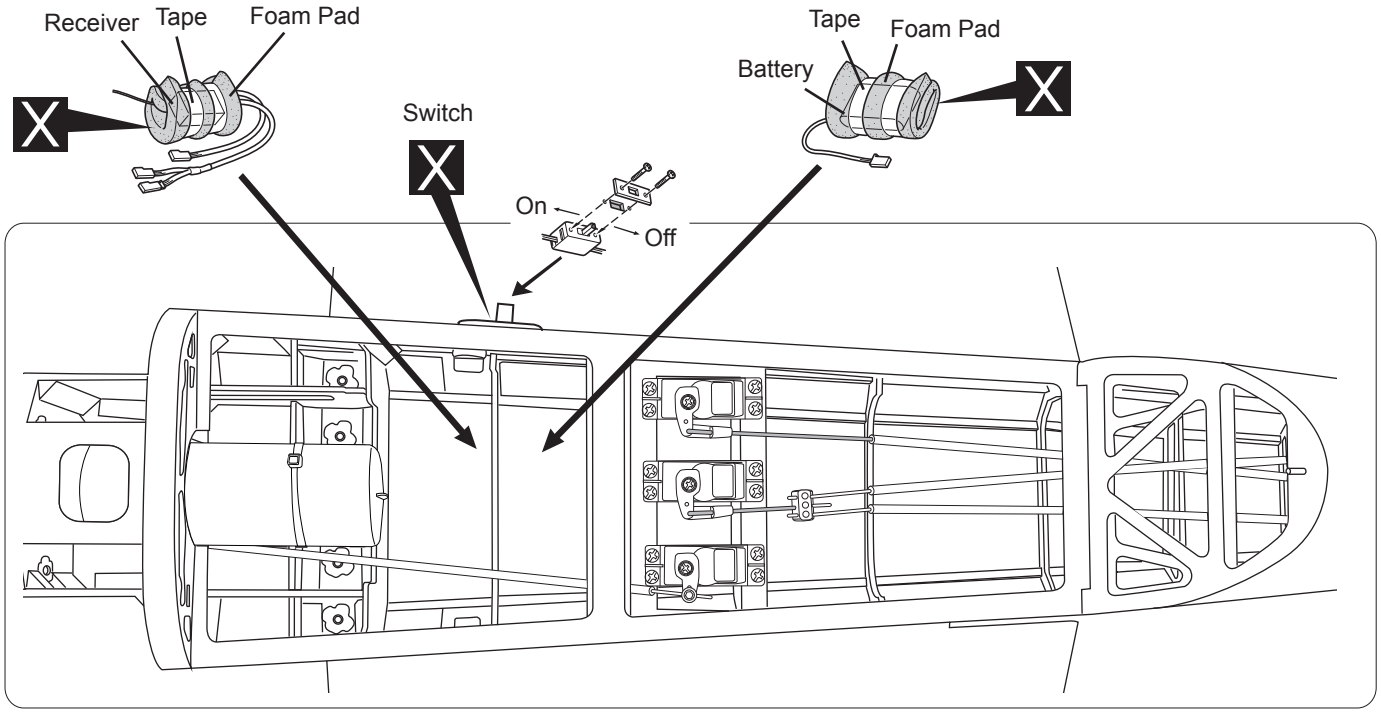

Must be purchased separately!

Warning!

Attach securely.
Disconnection during flight will cause loss of control and may result in an accident

INSTALLING THE ELECTRIC MOTOR

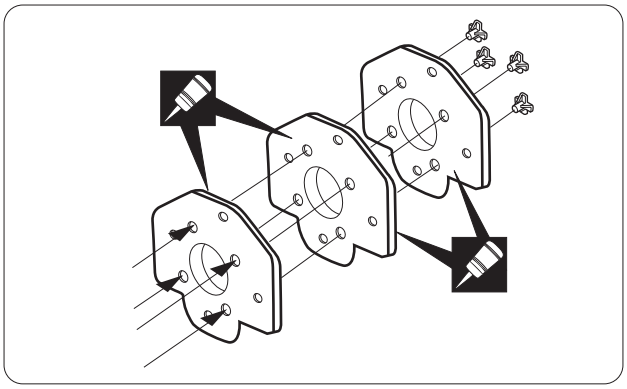

4 x 16mm Cap Screw ---------- 4

4mm Washer ---------- 8

4mm Spring Washer ---------- 8

4mm Mount Nut ---------- 4

4 x 60mm Cap Screw ---------- 4

5mm Washer ---------- 8

10x35mm Aluminum ---------- 4

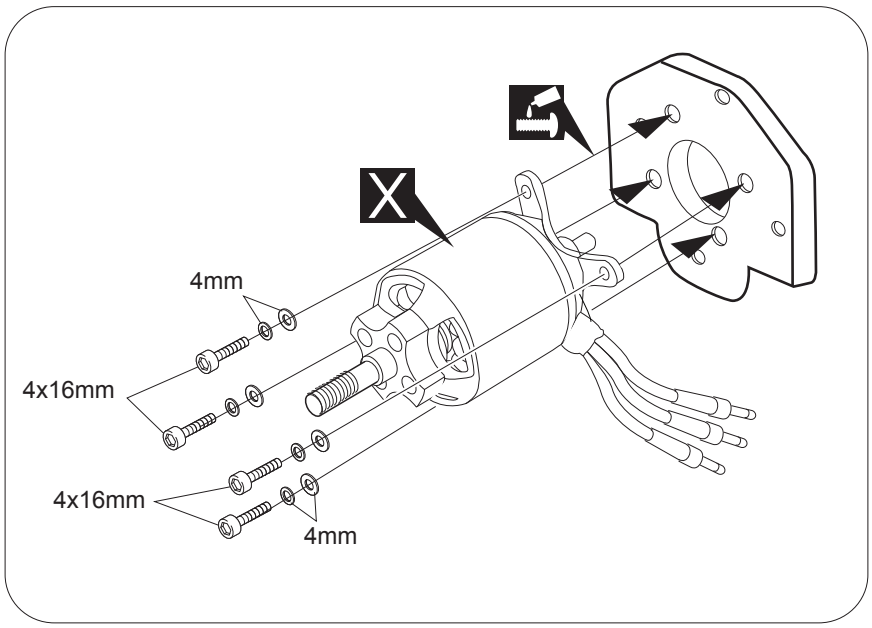

White glue

Apply threadlocker (screw cement).

Must be purchased separately!

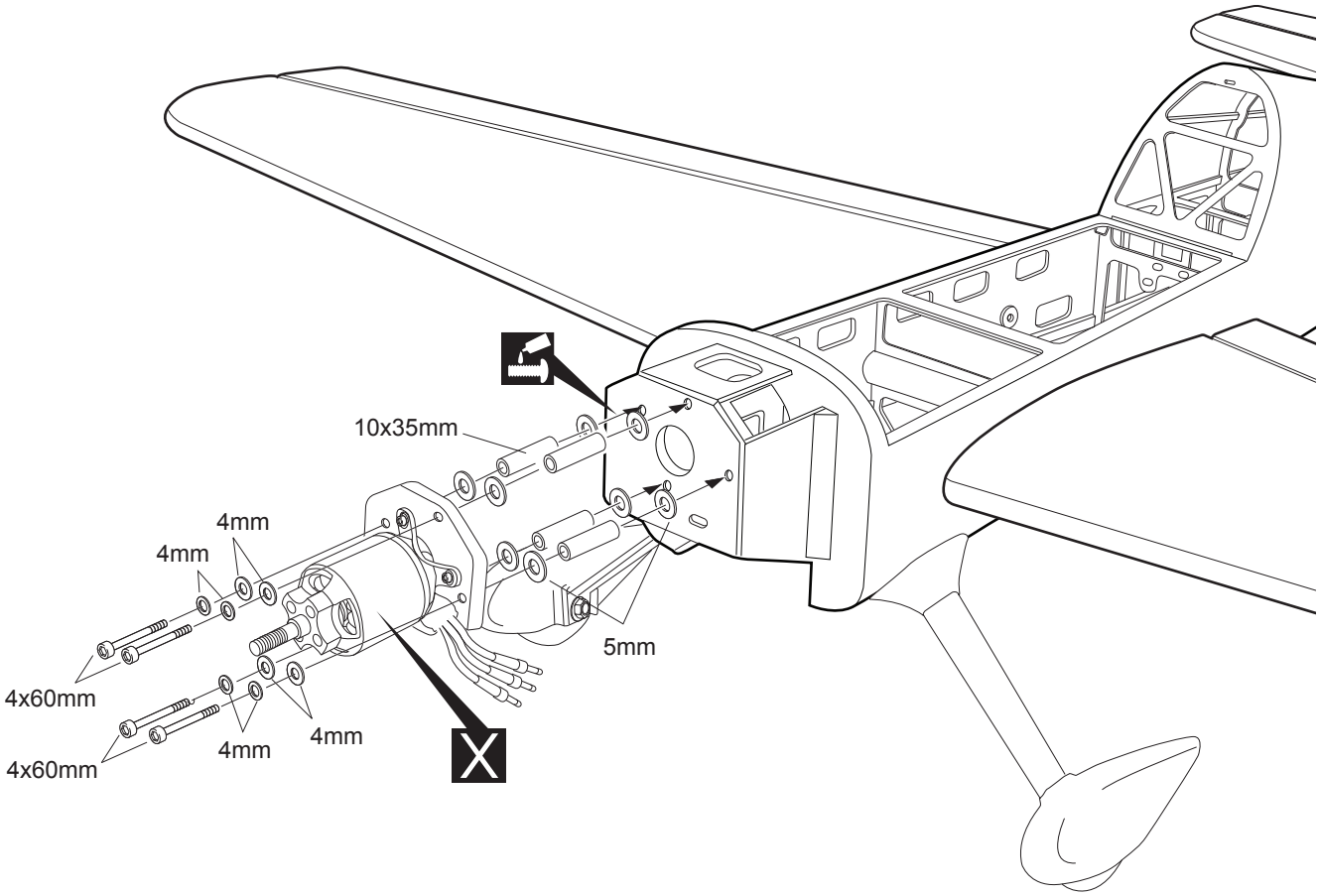

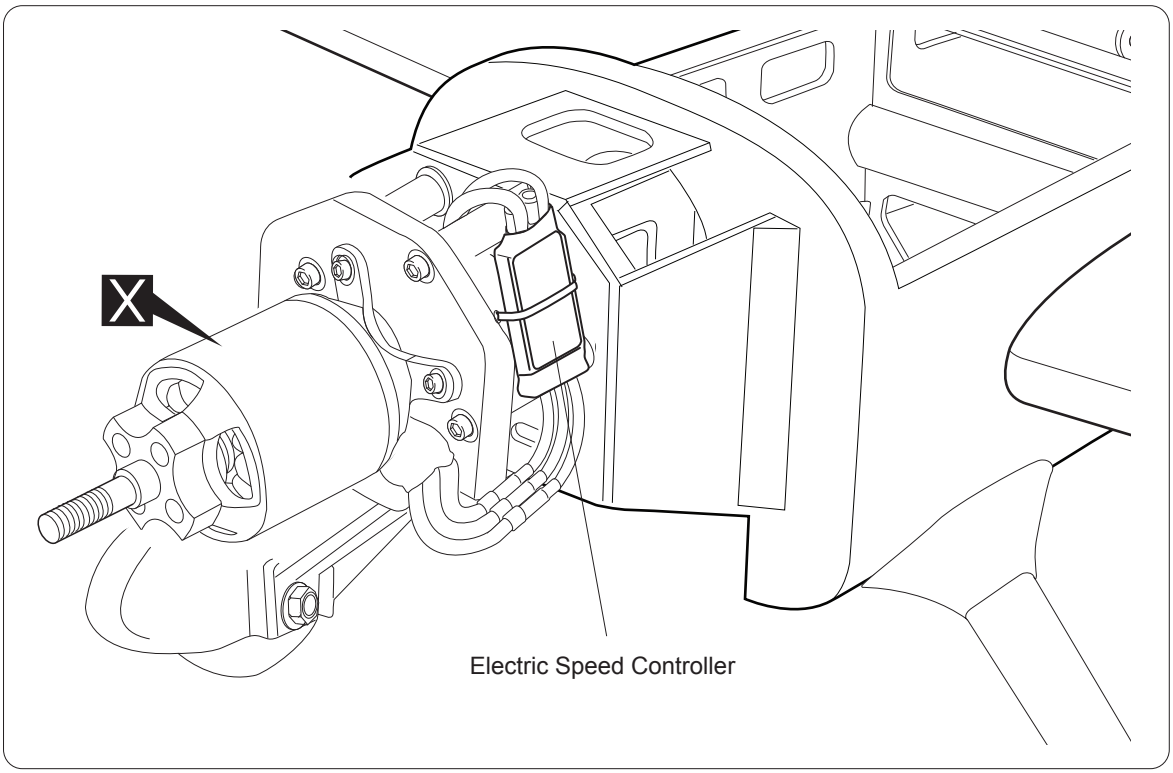

Apply threadlocker (screw cement).

Must be purchased separately!

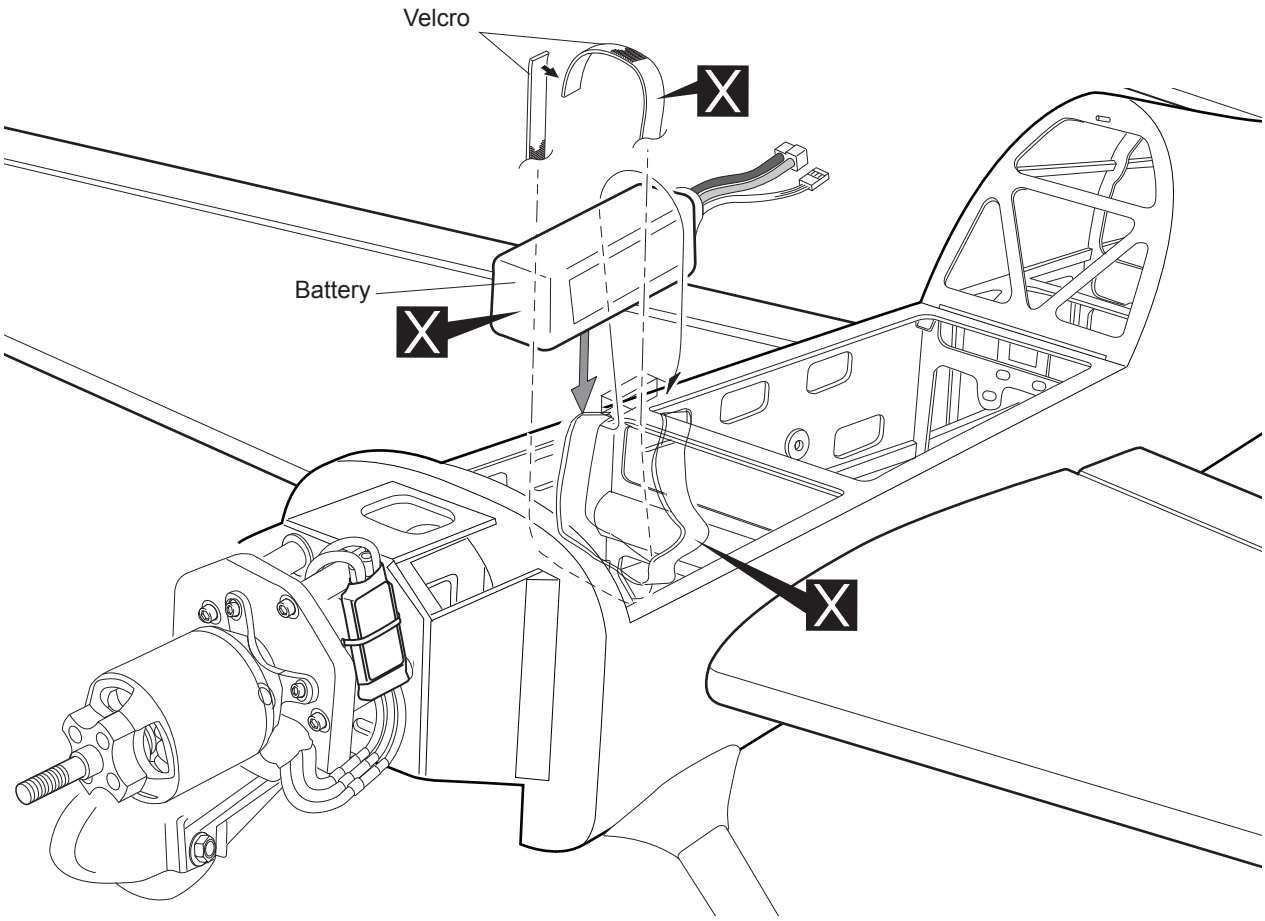

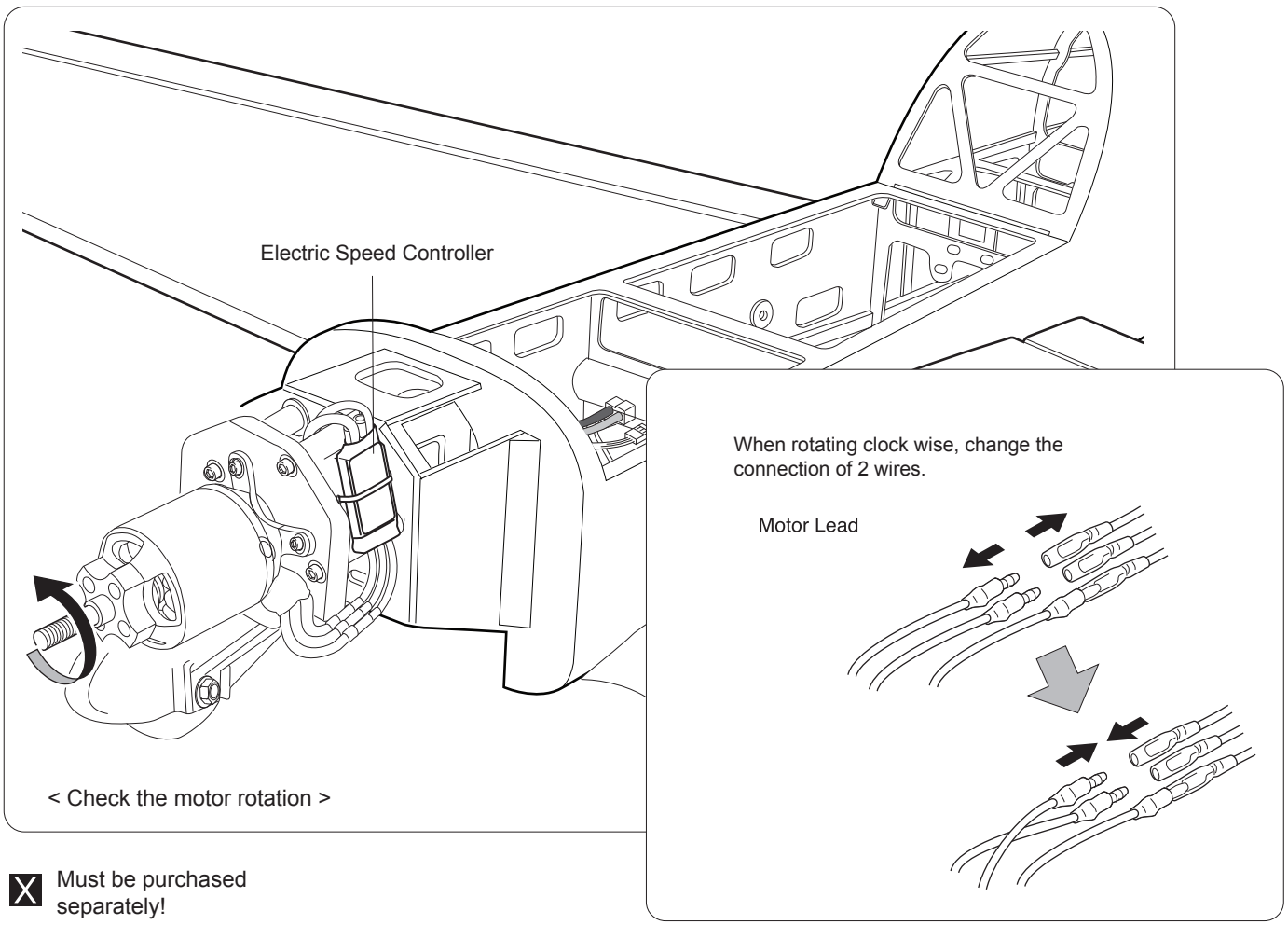

X Must be purchased separately!

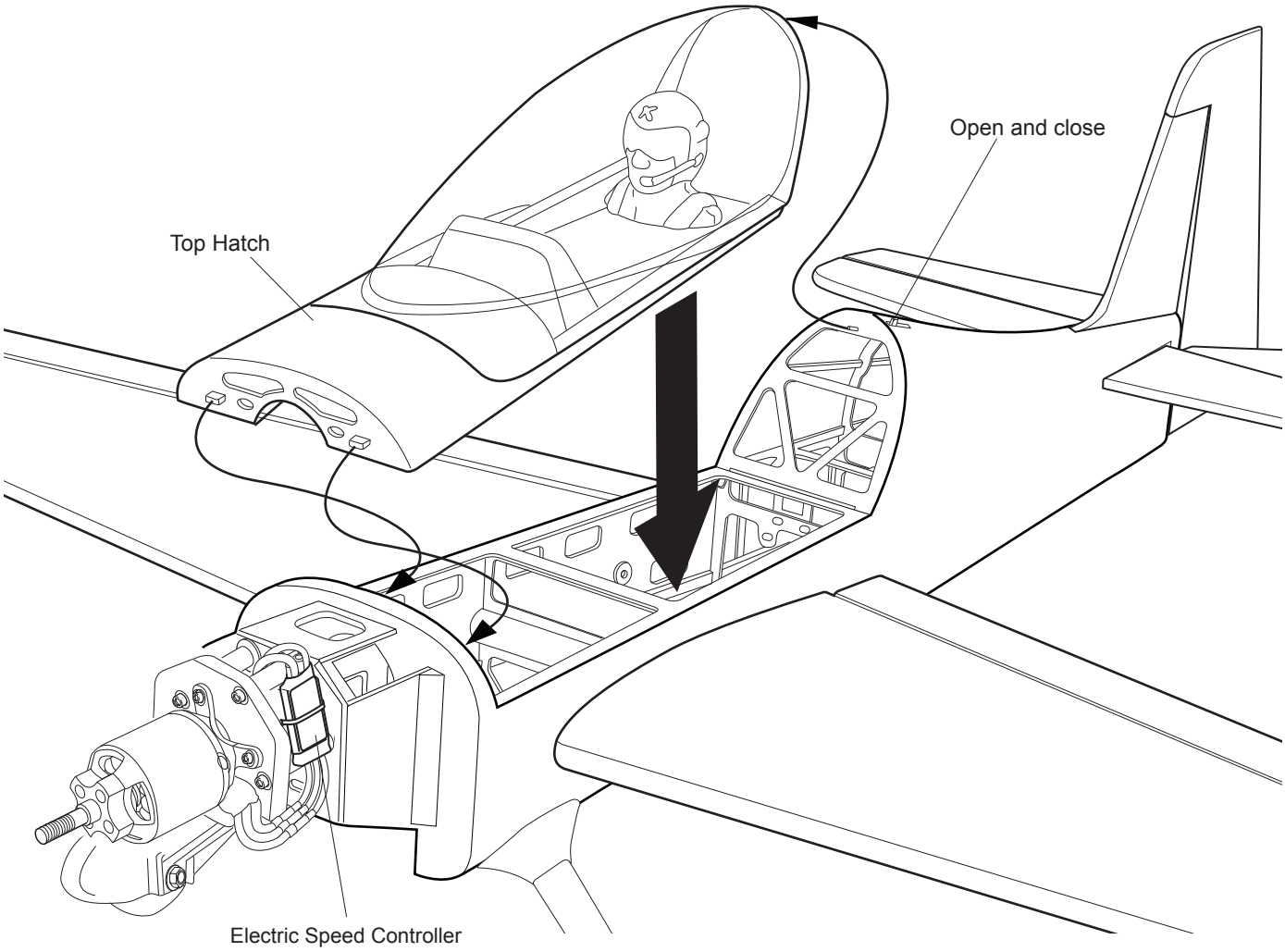

BALANCING

1. It is critical that your airplane be balanced correctly. Improper balance will cause your plane to lose control and crash.

THE CENTER OF GRAVITY IS LOCATED 95-100 mm (3.7-3.9 in) BACK FROM THE LEADING EDGE OF THE UPPER WING.

2. Mount the wing to the fuselage. Using a couple of pieces of masking tape, place them on the bottom side of the wing 95-100 mm (3.7-3.9 in) back from the leading edge.

3. If the nose of the plane falls, the plane is nose heavy. To correct this first move the battery pack further back in the fuselage. If this is not possible or does not correct it, stick small amounts of lead weight on the fuselage under the horizontal stabilizer. If the tail of the plane falls, the plane is tail heavy. To correct this, move the battery and receiver forward or if this is not possible, stick weight into the firewall. When balanced correctly, the airplane should sit level or slightly nose down when you lift it up with your fingers.

LATERAL BALANCE

After you have balanced a plane on the C.G. You should laterally balance it. Doing this will help the airplane track straighter.

1. Turn the airplane upside down. Attach one loop of heavy string to the engine crankshaft and one to the tail wheel wire. With the wings level, carefully lift the airplane by the string. This may require two people to make it easier.

2. If one side of the wing fall, that side is heavier than the opposite. Add small amounts of lead weight to the bottom side of the lighter wing half's wing tip. Follow this procedure until the wing stays level when you lift the airplane.

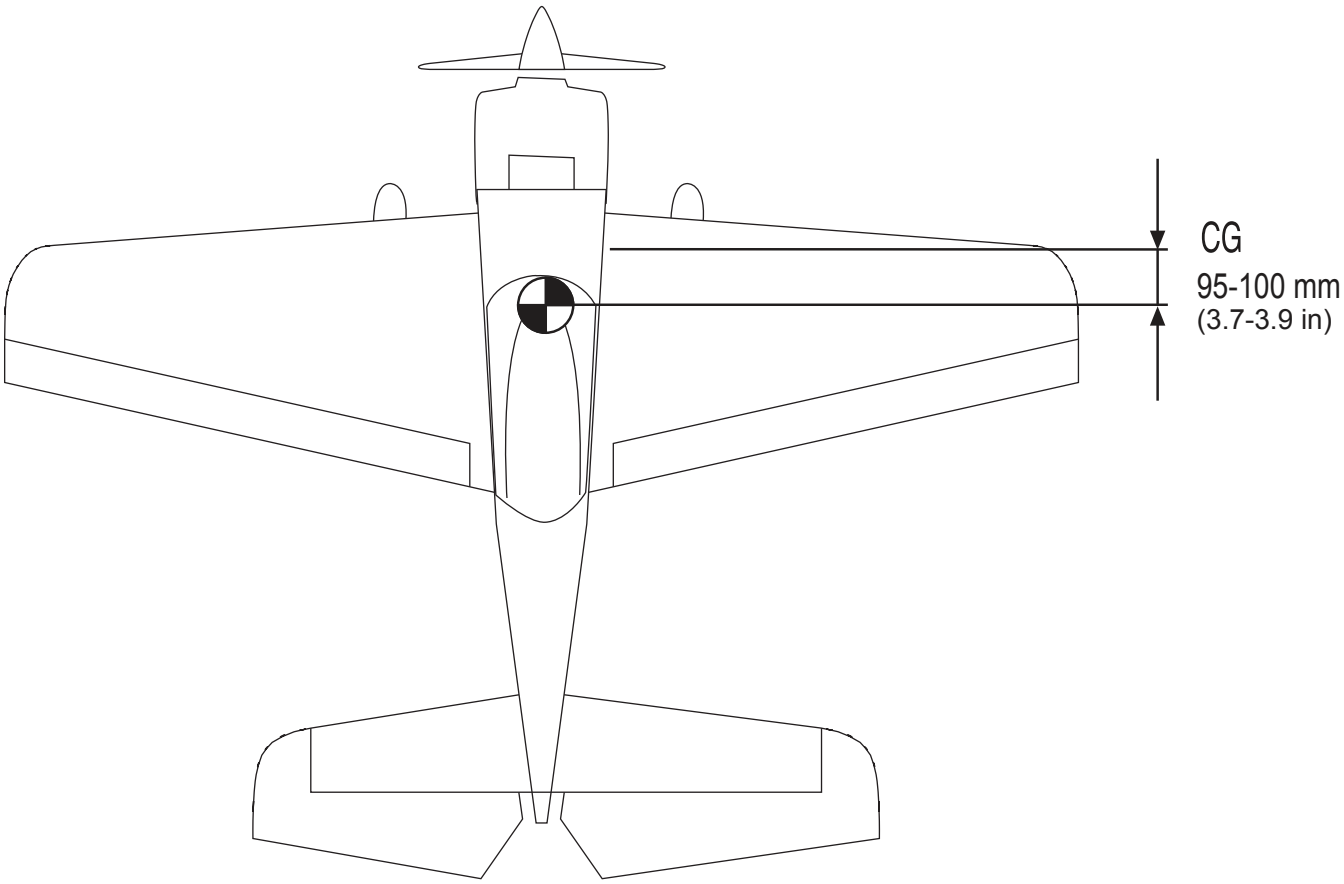

CONTROL THROWS

1. We highly recommend setting up a plane using the control throws listed.
2. The control throws should be measured at the widest point of each control surface.
3. Check to be sure the control surfaces move in the correct directions.

- **LOW RATE**

Ailerons :	11mm up	11mm down
Elevator :	11mm up	11mm down
Rudder :	25mm right	25mm left

- **HIGH RATE**

Ailerons :	14mm up	14mm down
Elevator :	14mm up	14mm down
Rudder :	40mm right	40mm left

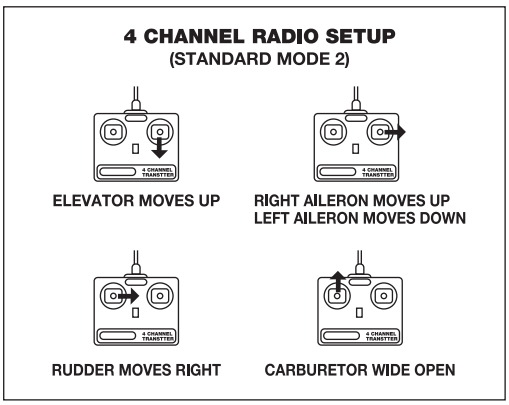

FLIGHT PREPARATION PRE FLIGHT CHECK

1. Completely charge your transmitter and receiver batteries before your first day of flying.
2. Check every bolt and every glue joint in your plane to ensure that everything is tight and well bonded.
3. Double check the balance of the airplane
4. Check the control surface
5. Check the receiver antenna . It should be fully extended and not coiled up inside the fuselage.
6. Properly balance the propeller.

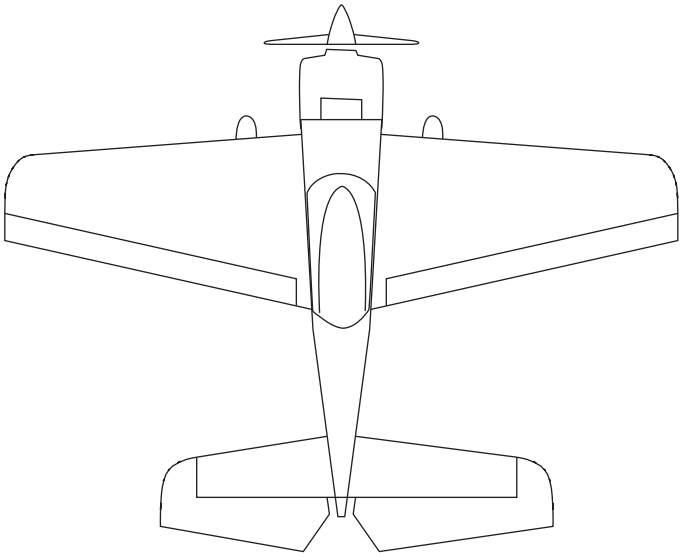

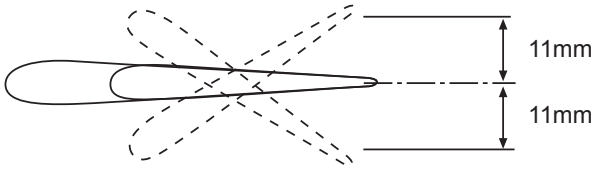

Aileron Control

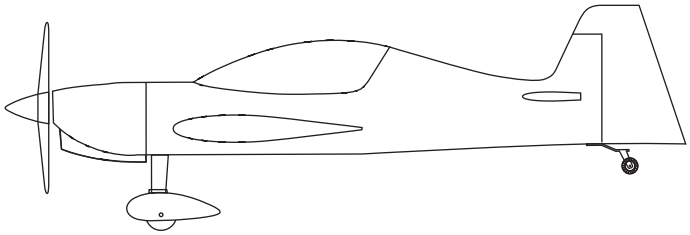

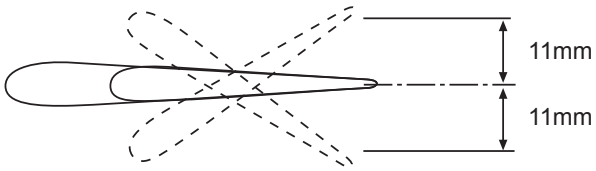

Elevator Control

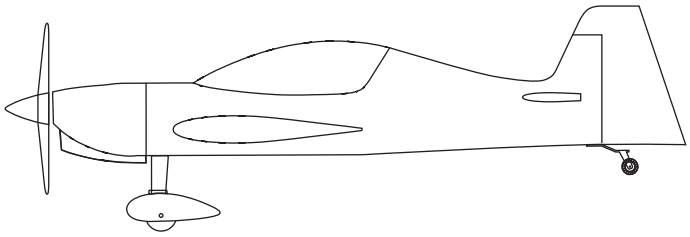

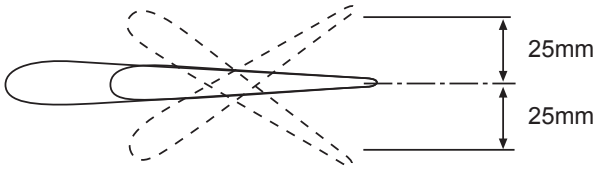

Rudder Control

FOR YOUR RADIO INSTALLATION
BASIC CONNECTION FOR AIRPLANE AND ADJUSTMENT OF SERVOS

Example of connection

- For more information, refer to radio system instruction manual.
- Follow instruction manual of Engine and Battery.

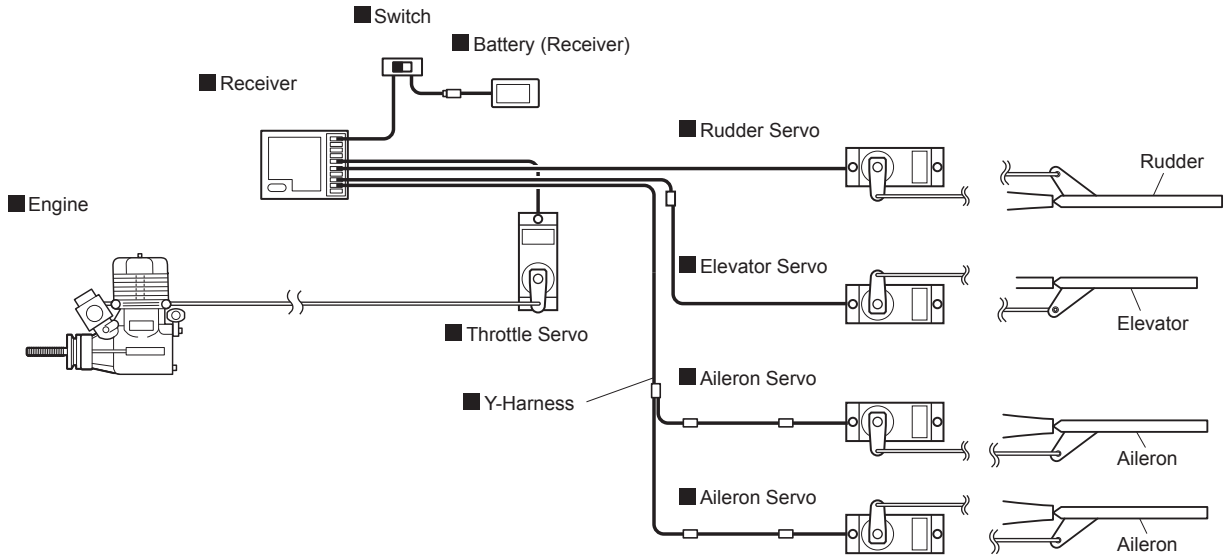

Main Gear Dimensional Detail

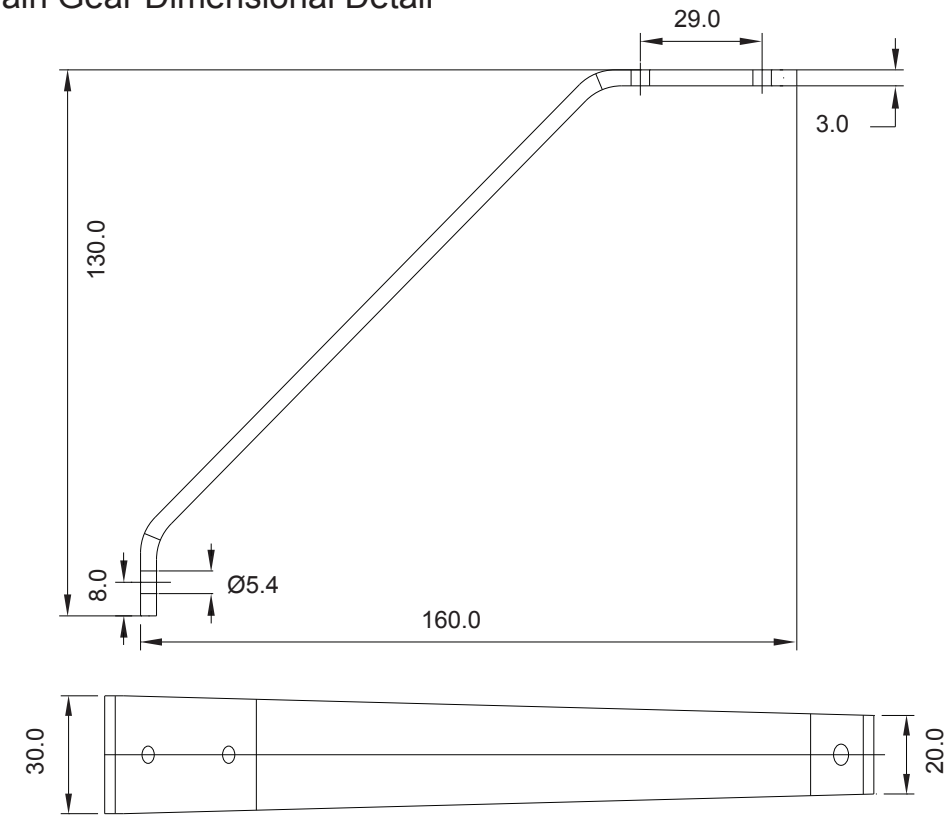

Tail Gear Dimensional Detail

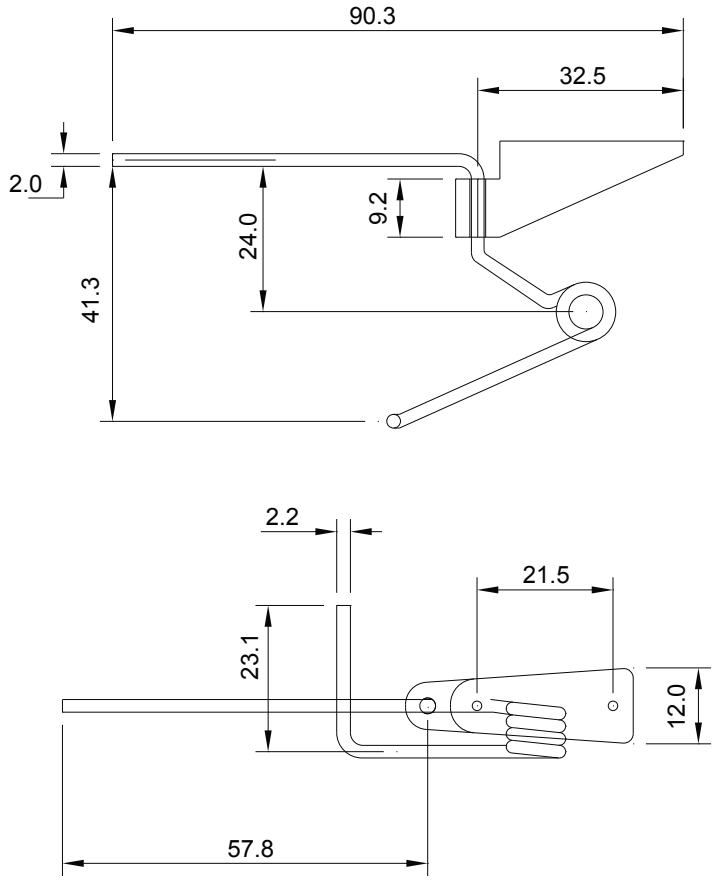

DECORATION

< Bottom view >

< Top view >

< Side view >

< Side view >

EXPLODED VIEW

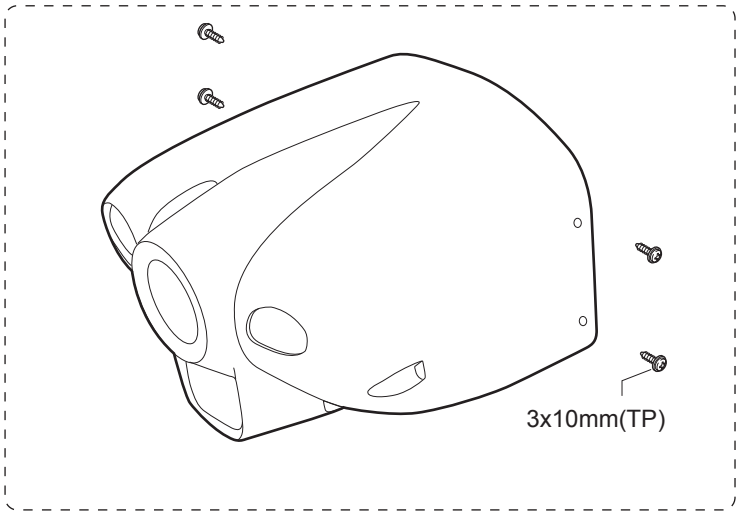

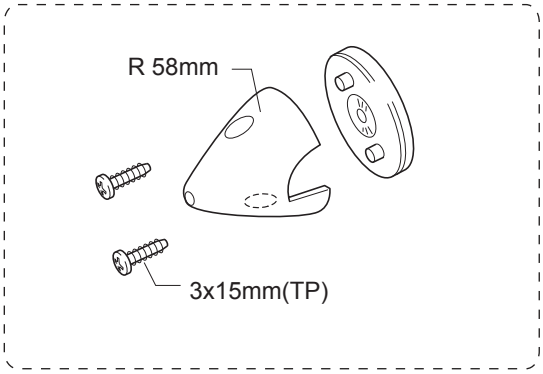

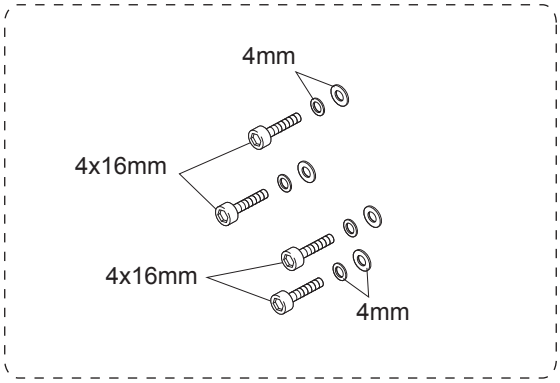

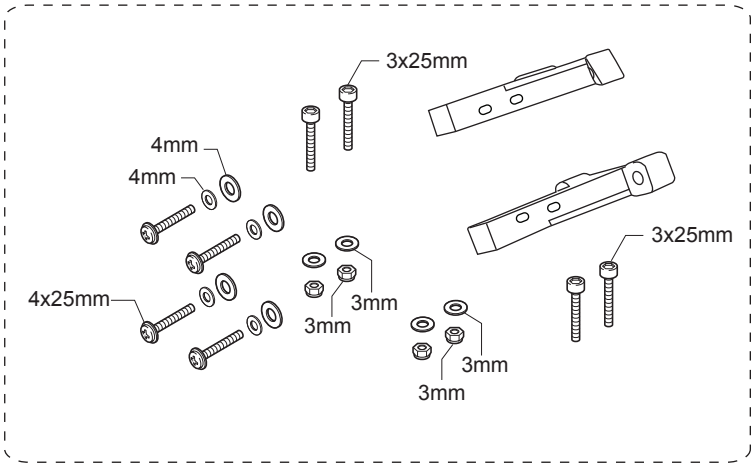

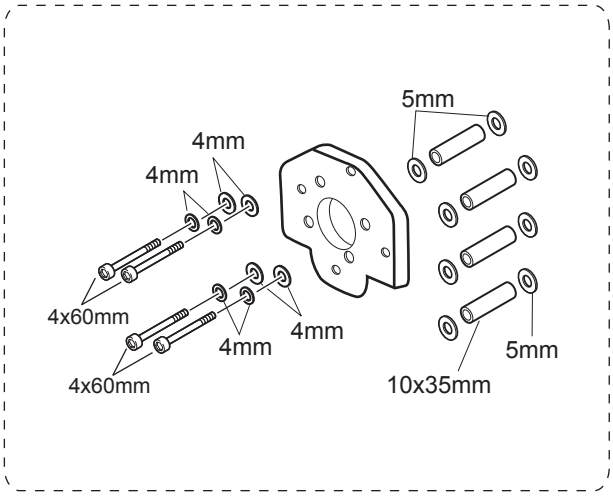

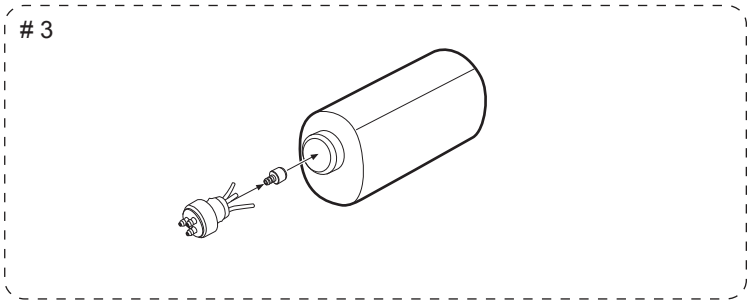

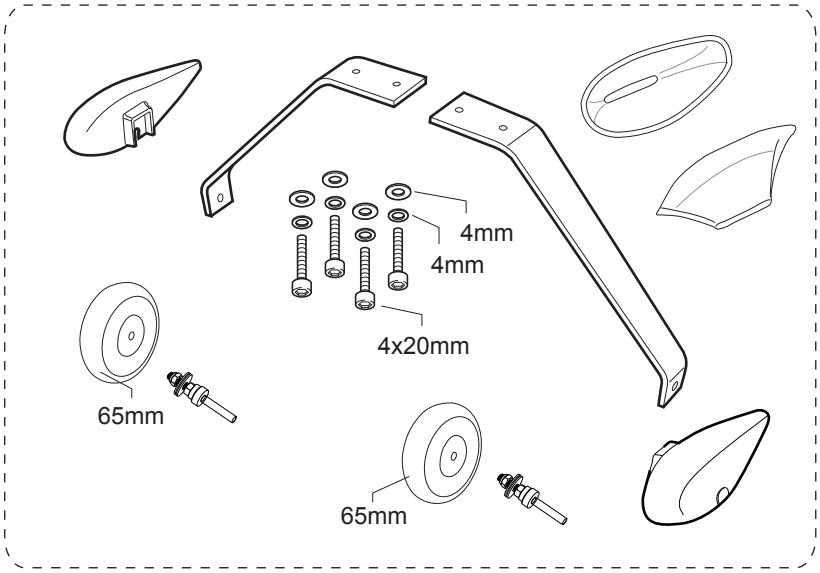

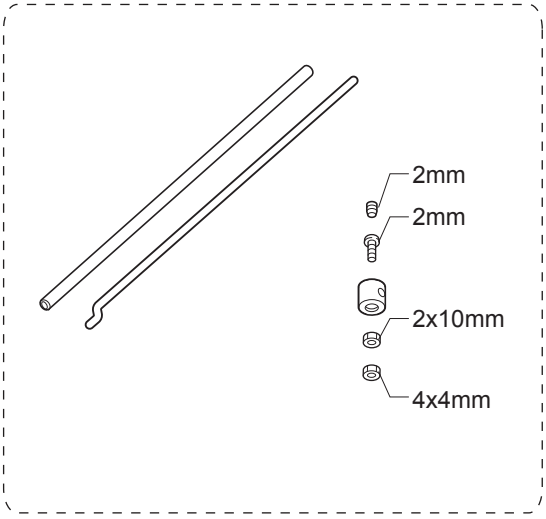

EXPLODED VIEW

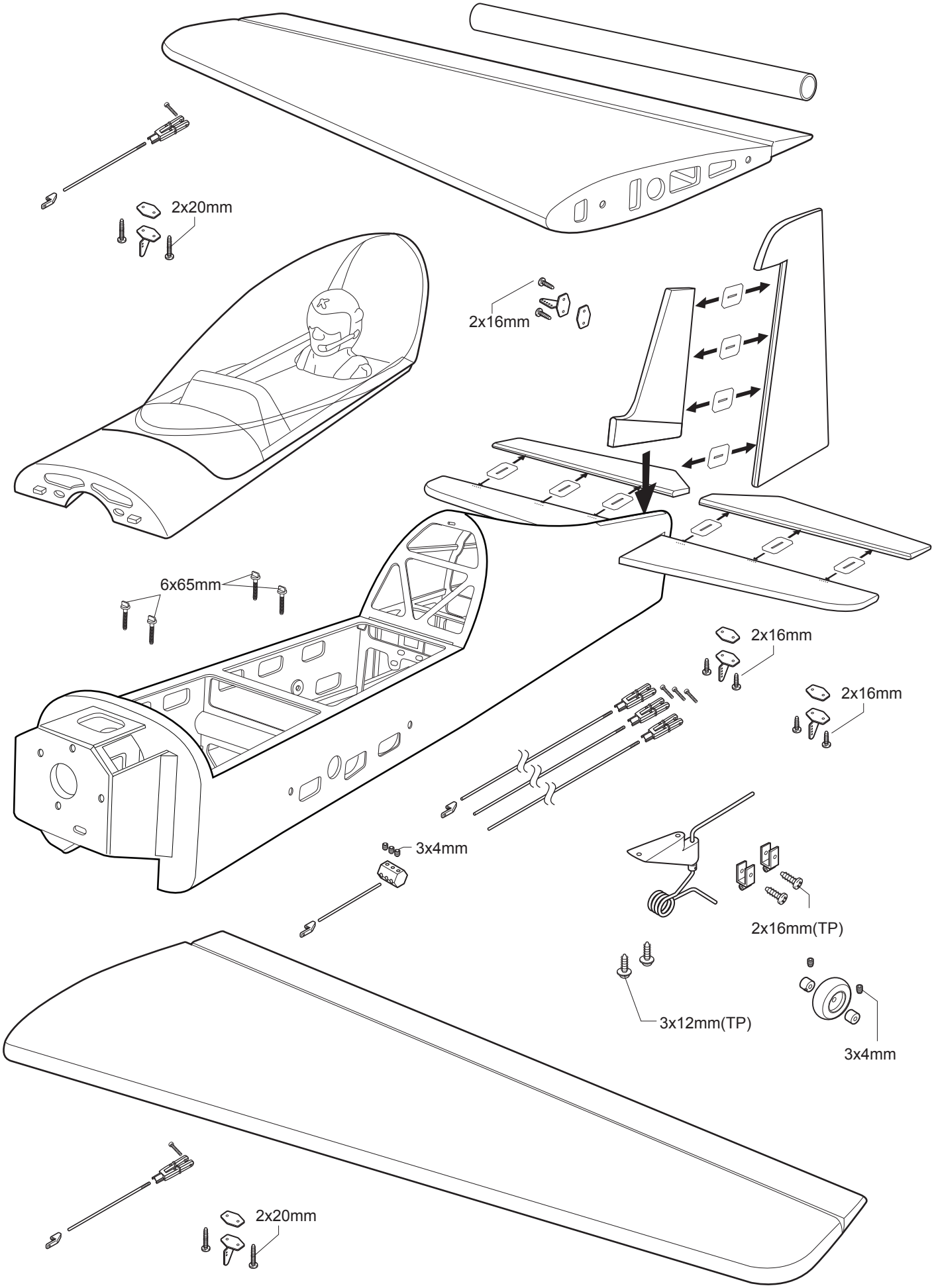

I/C FLIGHT GUIDELINES

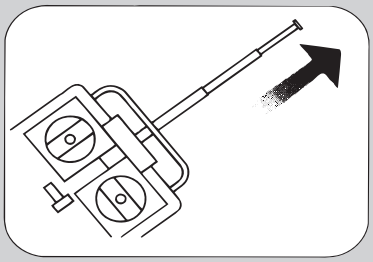

When ready to fly, first extend the transmitter aerial.

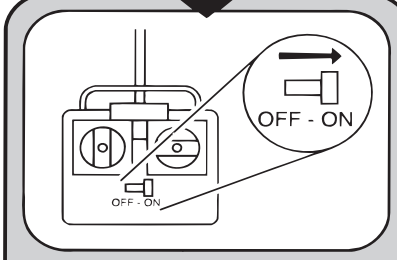

Switch on the transmitter.

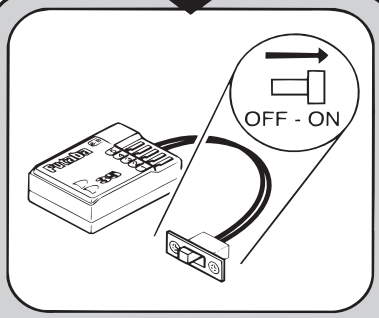

Switch on the receiver.

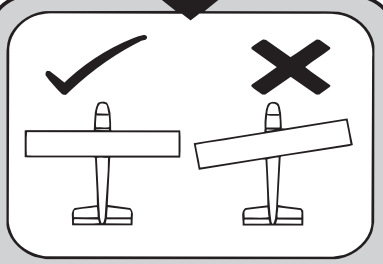

Check that the wings are correctly fitted to the fuselage.

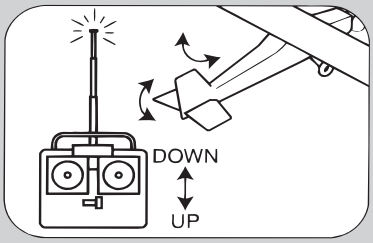

Operate the control sticks on the transmitter and check that the control surfaces move freely and in the CORRECT directions.

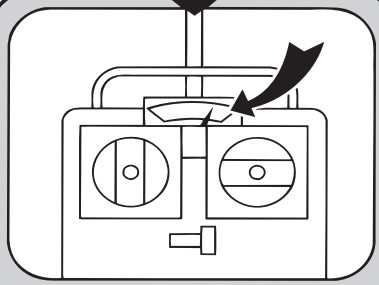

Check that the transmitter batteries have adequate power.

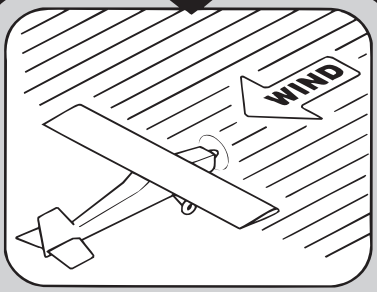

ALWAYS take off into the wind.

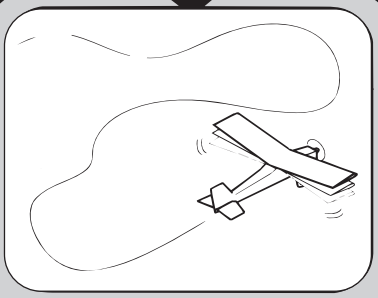

If the model does not respond correctly to the controls, land it as soon as possible and correct the fault.

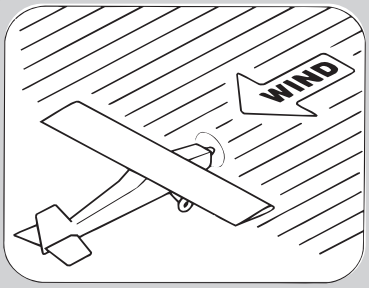

ALWAYS land the model INTO the wind, this ensures that the model lands at the slowest possible speed.

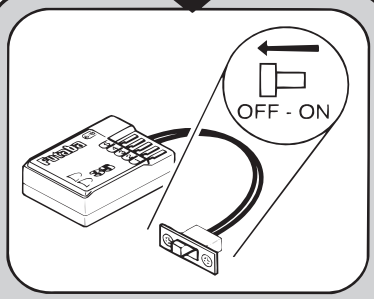

Switch off the receiver.

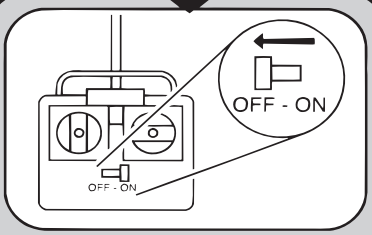

Switch off the transmitter.

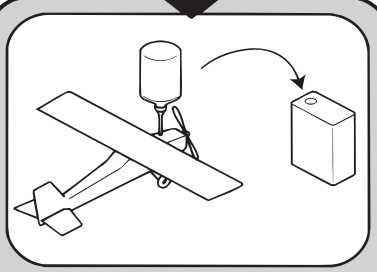

Empty the fuel tank after flying, fuel left in the tank can cause corrosion and lead to engine problems.

Made in Vietnam